NO. 71 NOTES FROM THE SHOP $3.95

Woodsmith®

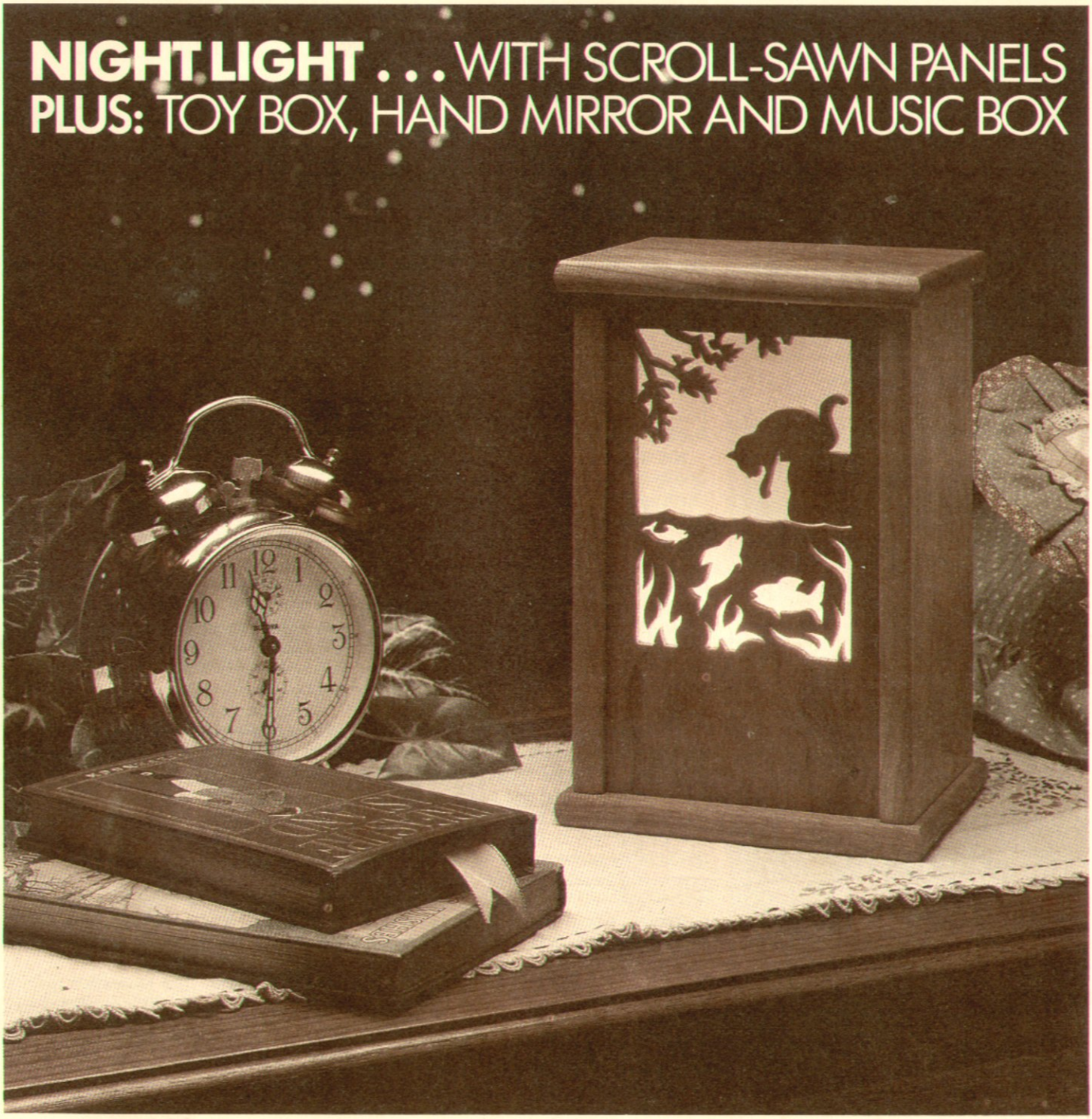

No. 71 October, 1990

Woodsmith

Editor Donald B. Peschke
Design Director Ted Kralicek
Managing Editor Douglas L. Hicks
Assistant Editors Terry J. Strohman, James M. Dolan, Richard S. Peters, Gordon Gaippe
Project Designer Ken Munkel
Illustrators David Kreyling, Cary Christensen, Rod Stoakes, Chris Glowacki
Graphics Director Jon Snyder
Project Supplies Leslie Ann Gearhart, Kelly Bradford, Scott Rhodes
Customer Service Mgr. Linda Morrow
Customer Service Linda Jones, Genelle Branson, Mic Smith, Jennie Enos, Janice Kerkove, Jozlyn Pross, Jerry Vancinni
Controller Paul E. Gray
Bookkeeping Linda O'Rourke
Network Administrator Douglas M. Lidster
Administrative Assts. Cheryl A. Scott, Sandy Baum
Sourcebook Jean Myers, Kent A. Buckton
Shop Manager Steve Curtis
Building Maintenance Ken Griffith, Archie Krause
Store Managers:
Berkeley, CA Michael DeHaven
Des Moines, IA Kent Welsh

Woodsmith (ISSN 0164-4114) is published bimonthly (Feb., April, June, Aug., Oct., Dec.) by Woodsmith Publishing Co., 2200 Grand Ave., Des Moines, IA 50312.
Woodsmith is a registered trademark of Woodsmith Publishing Co.
©Copyright 1990 by Woodsmith Publishing Company. All rights reserved.
Subscriptions: One year (6 issues) $15.95. Two years (12 issues) $27.95. Canada/Foreign: add $2.00/year, U.S. funds. Single copy: $3.95.
Second Class Postage Paid at Des Moines, IA and at additional offices.
Postmaster: Send change of address to *Woodsmith*, Box 10718, Des Moines, IA 50350.
Subscription Questions? Call 800-333-5075 8:00 am to 5:00 pm, Central Time, weekdays.

EDITOR'S COLUMN

Sawdust

When I walked into the shop, I couldn't figure out what was going on. Everyone was just standing there, looking at something sitting on the table saw.

Out of the corner of my eye, I caught a glimpse of what looked like a small TV screen. Then I realized it was the prototype of the night light we had been working on.

The front panel of the night light has a scene of a cat about to catch his dinner. (See the cover of this issue.) It was amazing to see how that scene mesmerized everyone. I even found myself staring at the night light, sure that any moment the cat would make his move.

Ken (our project designer) said he had more fun designing that scene than anything he's worked on in years. Then he came up with three more scenes. So we decided to redesign the box so you could store three panels in back and change them around as you wanted.

Well, that was the beginning of what has proved to be a very interesting issue. Every year we try to have one issue devoted to projects that you can build as gifts for kids and for friends.

TOY BOX. Although we were all mesmerized by the night light, I suppose the biggest challenge was the toy box — the one that looks like a giant block (page 6).

You know the toughest part about building these toy boxes? Keeping them in the correct perspective. By that I mean, we started out building them to adult scale. That didn't work for kids.

We built the first one big enough to hold lots of toys. But when we gathered up a small herd of *Woodsmith* kids to test it out, it became clear they had a different perspective . . . and shorter arms.

What we needed was a small box for small kids and a big box for big kids. That's when we came up with the idea of a false bottom that could be moved up so short arms could reach all the way in. Then as the arms (and all the other parts) grew over the next few years, you could adjust the false bottom down. The end result seemed to please everyone.

GIFTS. In addition to the projects for kids, we came up with three projects that could be gifts for any age: a music box, a mirror, and a paper gripper.

As I was about to complete the music box, I found a small piece of burl veneer and some inlay strips and couldn't resist adding them to the lid. Then I decided to make another lid and try my hand at chip carving a pattern in it.

Although we don't show it, I also experimented with carving initials in the lid. The great thing about a small box like this is that you can experiment with all sorts of techniques — and you wind up with very individualized gifts.

The same thing happened with the hand mirror. At first, I concentrated on the basic techniques — cutting a blank to a circular shape to match the shape of the beveled glass mirror. The next task was to rout out a section for the mirror to rest in.

I thought I had done okay, until I saw what happened as the mirror was used. Almost everyone who picked it up placed it back down with the mirror side down. All of my attention had been on the side with the mirror — but the back side is just as important.

Okay, another mirror, this time with a carved initial on the back. Much better. And I thought about making a version with a burl veneer inlaid as on the music box. (See what happens when you're having fun.)

NEW FACES. One of the most amazing things that's happened in the past year is the growth of the *Woodsmith Catalog*. We started it as a service to show the projects in the back issues of *Woodsmith* and to include some information on project supplies.

It just keeps growing and now it's all we can do to keep up with the phone calls and the mail. Fortunately, we have a great group of people who are anxious to take your order and help in any way they can.

That group is growing again. Linda Morrow (our customer service manager) asked me if she could hire a few more people for the fall season. I said sure — but only if their first names begin with the letter "J".

Wouldn't you know it, she hired Jennie, Janice, Jerry and Jozlyn (who's also known as Josh).

Also, when Archie retired, Ken Griffith joined us to help out with the building maintenance. (Of course, Ken's wife helps out sometimes too. Her name is Jan. So we're back on those "J's" again.)

NEXT MAILING. The December issue of *Woodsmith* (No. 72) will be mailed during the week of December 1, 1990.

Don

A LOOK INSIDE

Contents

Tips & Techniques 4 *A Special Tips Contest and six great tips from fellow woodworkers: 1) Contour Boring Jig. 2) A Vise Helper. 3) Router Table Dowels. 4) Pilot Hole Marker. 5) Wing Nut Wrench. 6) Hinge Mounting Helper.*

Toy Box 6 *We built this Toy Box with kids in mind. Two adjustable lid supports prevent the lids from slamming down on little fingers. And to make it easy to move we put it on casters.*

Hand Mirror 12 *This routed Hand Mirror makes an elegant addition to any dresser. And the carved initial make this a truly personal gift.*

Shop Notes 16 *1) Routing a Corner Radius. 2) Photocopy Transfer. 3) Ironing Veneer. 4) Hinge Locator Pins.*

Music Box 18 *Walnut burl veneer and an inlaid accent strip highlight the lid of this classic Music Box.*

Paper Gripper 22 *We took a cue from the local diner and designed a Paper Gripper that can be built in short order.*

Talking Shop 24 *We have information on a self-centering hinge bit. Plus, we look at laying out boards and give a few tips for sanding on a lathe.*

Night Light 26 *Built from solid cherry, this Night Light adds a friendly glow to any room. And with four interchangeable panels, it will adapt to almost any mood.*

Sources 31 *Hardware and project supplies needed for the projects in this issue.*

Toy Box *page 6*

Hand Mirror *page 12*

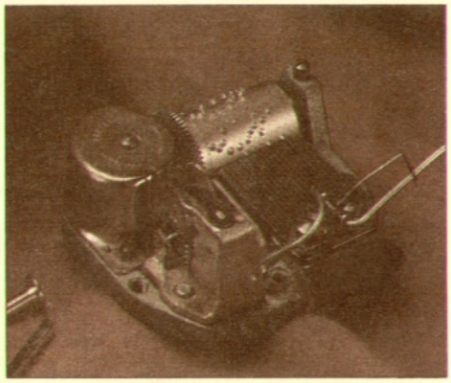

Music Box *page 18*

Night Light *page 26*

Tips & Techniques

CONTOUR BORING JIG

■ When I need to drill accurate holes in contoured legs or any odd-shaped workpiece, I make a jig to hold the workpiece securely in position on the drill press table, refer to Fig. 2.

To make the jig, I start by jointing one edge of a 2x6 or 2x8 flat and square. (This provides a stable surface to sit on my drill press table.) Next trace the contour of the workpiece onto the jig, keeping the edge to be drilled parallel with the jig's jointed edge, see Fig. 1. Then cut out the contour on the band saw.

Now place the jointed edge of the jig on the drill press table, set the workpiece into the cutout area, and drill, see Fig. 2.

Louis C. Johnson
Davenport, Iowa

VISE HELPER

■ I often need to hold long boards edge-up for doweling, mortising, or planing. But it's hard to do this with only one vise. So, along with the vise at one end of my bench, I use an inexpensive metal shelf bracket at the other end to hold up the long stock, see Fig. 1.

The bracket hooks into a shelf standard that's mounted on the bench leg. These standards come in many lengths, and allow the bracket to be adjusted up or down to suit the size of the wood being worked.

I covered the top edge of the shelf bracket with a piece of split garden hose to prevent marring the wood, see Fig. 1a.

John O. McDonald
Englishtown, New Jersey

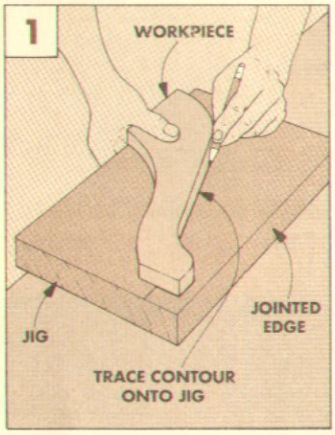

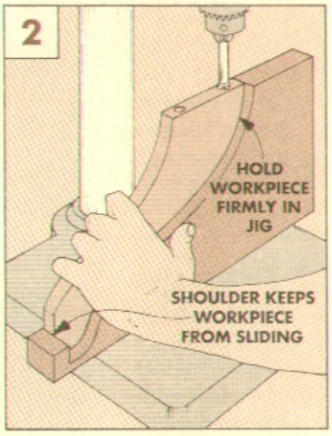

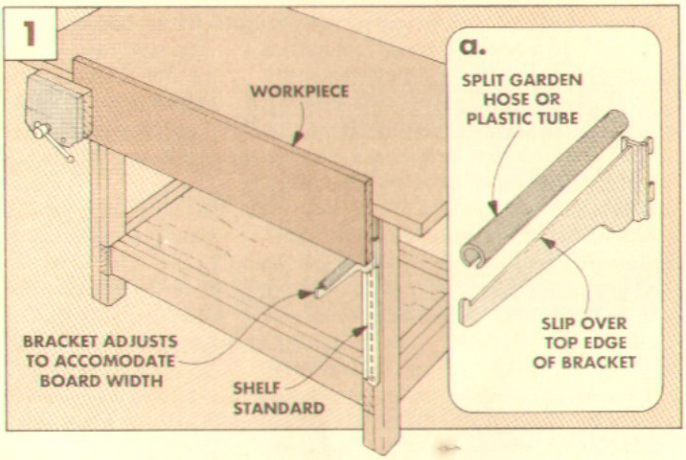

ROUTER TABLE DOWELS

■ When I have a project that requires short lengths of hardwood dowels, I make my own on the router table, see Fig. 1. It saves money, and the dowels' grain and color match the rest of the project.

I start with a square piece of stock the exact width and thickness as the desired dowel diameter, but at least four inches longer than the desired length. To make a ¾"-diameter dowel, for example, first cut some ¾" x ¾" stock to rough length.

Then, mount a ⅜" round-over bit in the router table. (The radius of the round-over bit has to be half the desired diameter of the dowel.) It's very important that the cutting edge of the bit be mounted flush with the table top and with the fence.

To mill the square stock into a round dowel, press the stock against the round-over bit about 2" from the left end, see Fig. 1. Then push the stock to the left, stopping about 2" from the right end. This leaves a flat surface for holding the stock safely against the router table and the fence. Now turn the stock 90° and rout the adjacent side, see Fig. 2. Then rout the other sides in the same manner. Finally, cut the dowel to length.

Steve Barrett
Kalispell, Montana

Editor's Note: This technique works fine for ½"-diameter dowels and larger. On thinner pieces, the stock vibrates too much as it passes over the router bit. For a jig to make smaller diameter dowels, see Woodsmith *No. 39.*

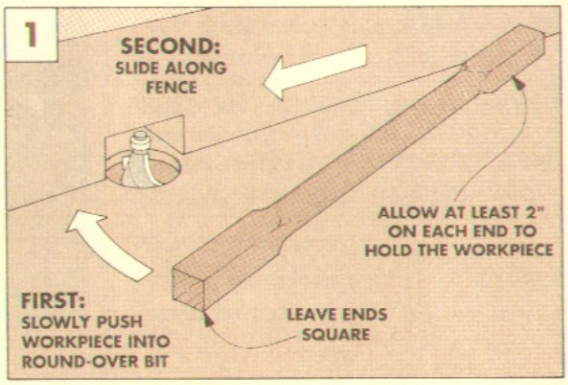

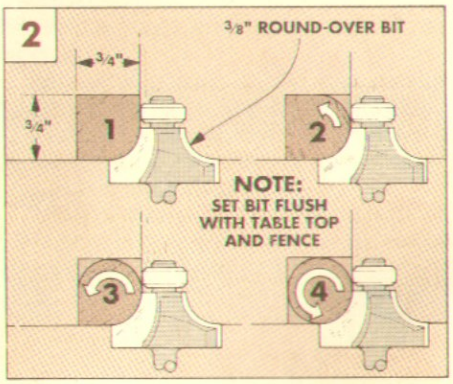

SHOP TIPS CONTEST

Many *Woodsmith* readers tell us they're very interested in making projects for the shop. So, for the next few issues, we'll ask you for tips and techniques on solving different shop problems.

We'll read your tips and try them out. Up to three of the best tips in each category will be awarded a *Woodsmith* Master Try Square. Duplicate or very similar tips will be considered in the order we receive them.

DRILL BIT ORGANIZERS

To begin, we want tips on how to organize drill bits. If you have a procedure or a fixture that keeps all your drill bit types and sizes organized, we want to hear about it.

We'll publish the best tips on organizing drill bits in the February 1991 issue of *Woodsmith* (No. 73). Send your tips (postmarked no later than November 2, 1990) to Shop Tips Contest, *Woodsmith*, 2200 Grand Ave., Des Moines, Iowa 50312. We'll continue to publish other Tips and Techniques, too, and pay upon publication $15 to $100 for these tips based on the published length.

PILOT HOLE MARKER

■ When joining two pieces of wood with screws, I like to drill a shank hole in the top or front piece and a pilot hole in the anchor piece. But it's difficult to mark the pilot hole so it's accurately centered on the shank hole. Center punches are too large to fit through the shank hole, and thin awls are too small to be accurate. To solve the problem, I use an altered machinist's pin punch.

Pin punches are available at most hardware stores, and come in the same diameters as drill bits. I buy a punch with the same pin diameter as the shank hole. Then I grind down the tip so it matches the diameter of the pilot hole I want to drill. To do this, drill a hole through a scrap wood block the same diameter as the shank hole and insert the pin punch. Then clamp the wood block to the tool rest on the grinder with the end of the punch against the side of the grinding wheel, see Fig. 1.

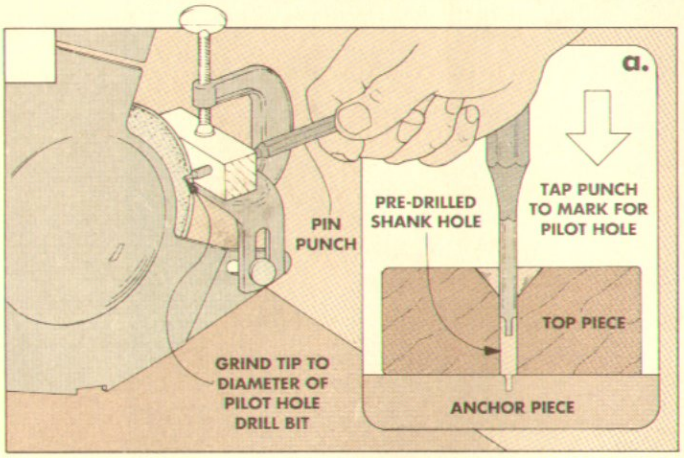

Next, rotate the punch in the wood block until the tip is the same size as the pilot drill bit.

To use the pin punch, insert it in the pre-drilled shank hole and tap the punch to mark the center of the pilot hole, see Fig. 1a.

Harvey Simms
Dayton, Ohio

WING NUT WRENCH

■ I was never able to finger-tighten the small wing nuts on my *Woodsmith* router table fence securely enough so the fence wouldn't slip. To solve this problem, I built a wing nut wrench, refer to Fig. 2. It provides so much torque that you have to be careful not to snap off the wing nuts.

To make the wrench, I cut some ¾"-thick stock 3½" square, see Fig. 1. Next, I bored a ⅜"-diameter hole centered in the end grain, 1½" deep. Then I widened the opening of the hole with a countersink bit, see Fig. 1a.

Next, using the table saw, I cut the slot in the workpiece ⅝" deep and ¼" wide. A ¼"-wide dado blade centered on the thickness of the stock will cut the slot in one pass. You could also make two passes with a standard ⅛"-wide blade.

After cutting the slot, cut the stock to a "T" shape on the band saw, so the hole and slot are at the base of the "T", see Fig. 1.

Finally, soften all the edges of the wrench with a router and a ¼" round-over bit.

This wrench tightens ⅜" and smaller wing nuts. It also works well tightening the thumbscrews, like those that lock a fence in place on the back of the radial arm saw table.

Walter E. Schneidmiller
Scott AFB, Illinois

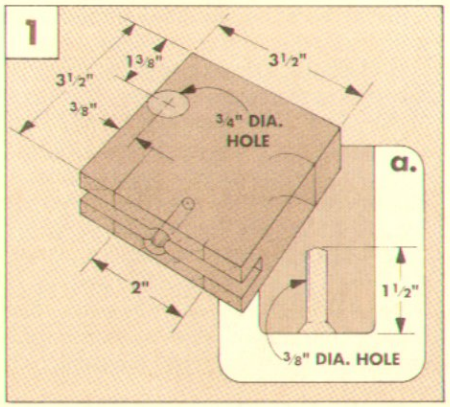

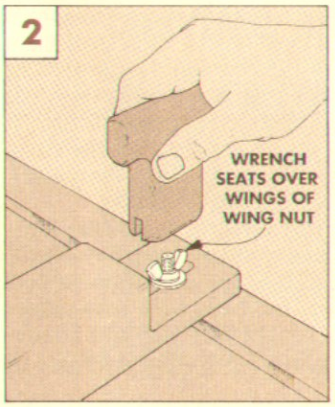

HINGE HELP

■ Here's another way double-sided carpet tape can be used around the shop. I use it to help accurately align and attach loose-pin hinges.

First, I screw the hinge onto the door. Next apply a layer of carpet tape to the hinge leaf that contacts the cabinet.

Then, position the door on the cabinet and press on the hinge location. Once the tape is firmly attached to the cabinet, gently remove the hinge pin and the door. The carpet tape holds the hinge leaf securely in place for pilot hole drilling and outlining for mortising.

This technique can also be used for tight pin hinges. After pressing firmly on the hinge location, very carefully open the door and support it while you attach the hinge to the cabinet.

John Westick
Boulder, Colorado

Toy Box

How do you get kids to put their toys in a toy box? Make it look like a toy itself. This one is large enough to hold plenty of toys, yet it has a false bottom that adjusts so that even the smallest kids can reach inside.

This toy box looks so much like a toy, it might even get used. Apart from looking like a lot of fun, we tried to design it with kids in mind. The lids are supported with slow-closing lid supports, so they won't slam on little fingers. Curious fingers will also find rounded edges both inside and out. And, the bottom rests on adjustable shelf supports so it can be raised for even the shortest arms to reach the bottom.

CONSTRUCTION. The construction of the box is fairly simple. We used maple plywood for the sides and added solid maple strips at the corners so we could round them over. The front and back have mitered frames with a large glued-on letter and number. (*Woodsmith Project Supplies* is offering full-size patterns for the letters and numbers and a complete hardware kit for the toy box, see Sources, page 31.)

HARDWARE. There's actually more hardware on this project than meets the eye. The lids are attached to the sides with piano hinges, and supported with slow-closing lid supports. There's a false bottom that rests on adjustable shelf supports. And the real bottom is positioned to allow room for casters (so Mom or Dad can roll the toy box to where the mess is).

FINISH. One of the advantages of using maple is that it presents a good surface for painting. I painted the boxes with bright primary colors. After the paint dried, I applied two coats of gloss polyurethane varnish over the entire toy box to protect the paint from chipping.

EXPLODED VIEW

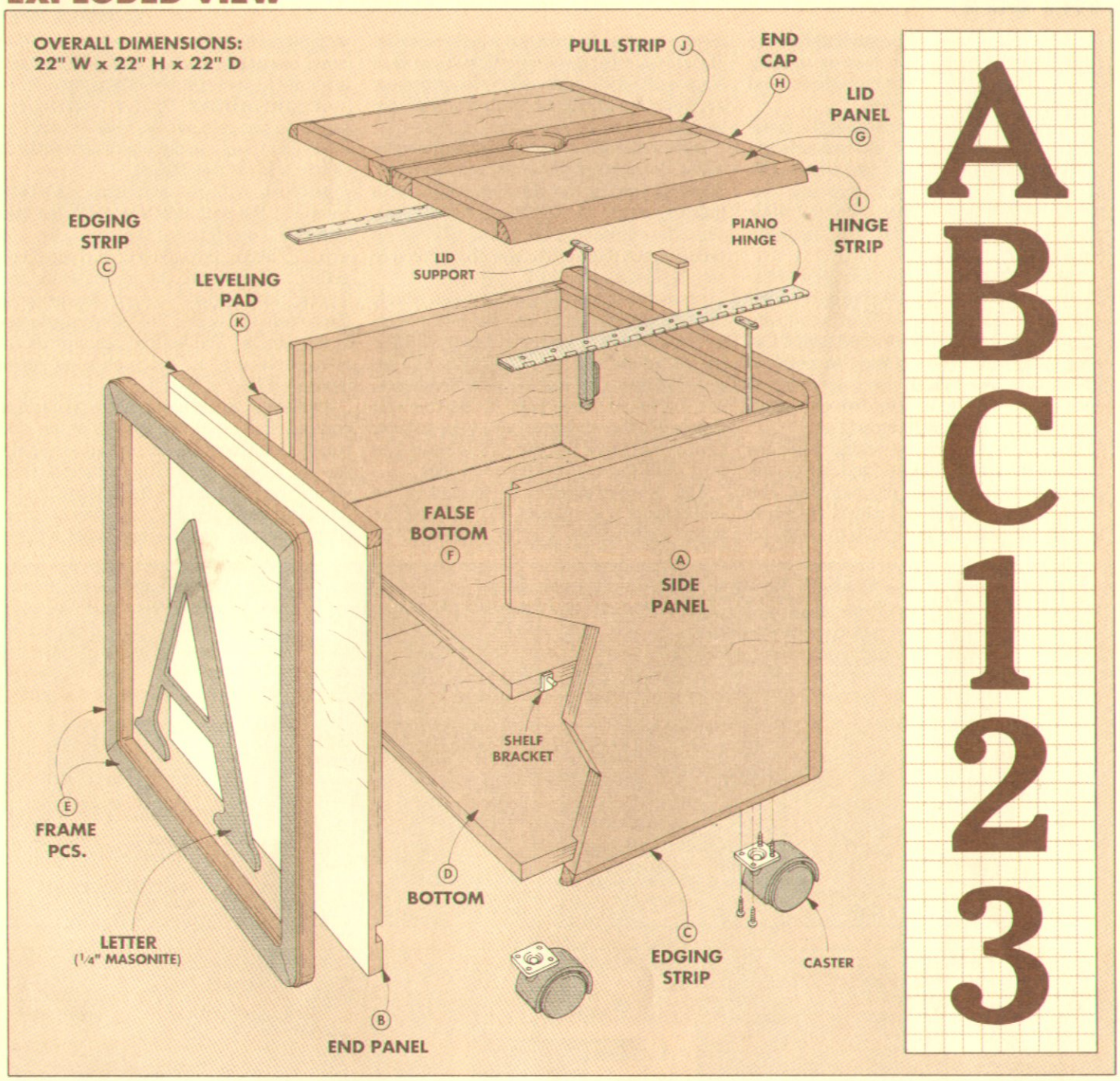

MATERIALS

WOOD PARTS

A	Side Panels (2)	3/4 ply - 20 5/16 x 20 1/2
B	End Panels (2)	3/4 ply - 20 5/16 x 21 1/2
C	Edg. Strips (4)	3/4 x 3/4 x 22
D	Bottom (1)	3/4 ply - 21 1/4 x 19 3/4
E	Frame Pcs. (8)	3/4 x 2 -24 rgh.
F	False Btm. (1)	3/4 ply - 18 3/4 x 20 1/4
G	Lid Panel (2)	3/4 ply - 8 3/16 x 18 3/4
H	End Caps (4)	3/4 x 3/4 - 8 3/16
I	Hinge Strips (2)	3/4 x 3/4 - 20 1/4
J	Pull Strips (2)	3/4 x 2 - 20 1/4
K	Lev. Pads (2)	3/16 x 3/4 - 2

SUPPLIES

- 5.9 Board Ft. of 3/4"-thick maple.
- 1 sheet 3/4"-thick maple plywood
- (2 pcs.) 1/4" Masonite 16" x 16"
- 1 Qt. gloss polyurethane varnish
- White enamel spray paint
- (2 colors) Enamel spray paint
- (2) Hinges 1 1/2" x 20 1/4" w/screws
- (2) Lid supports
- 1 1/2" Finish nails
- (4) Shelf brackets
- (4) 2" Casters

CUTTING DIAGRAM

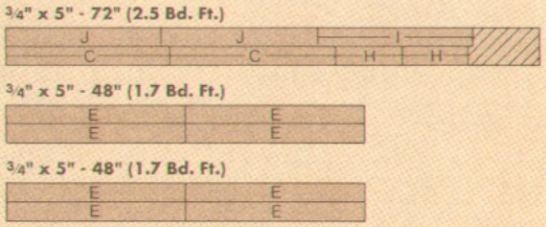

ALSO REQUIRED:
1 SHEET (4' x 8') OF 3/4" PLYWOOD
1/4 SHEET (2' x 4') OF 1/4" MASONITE

THE BOX

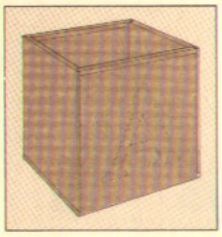

I began building the toy box by making the four side and end panels.

BLANKS. To make the **side panels (A)** and **end panels (B)** start by cutting four blanks of ¾"-thick plywood to a rough width of 22" and a rough length of 22", see Fig. 1.

EDGING STRIPS. To hide the edges of the plywood and allow for routing a rounded edge later, I glued ¾" x ¾" hardwood edging to one edge of each plywood panel. Cut the **edging strips (C)** to a finished length of 22" and glue them flush along one edge of each blank, see Fig. 1. Keep the ends of the blank and the ends of the strip flush.

TRIM BLANKS. Once the edging strips are glued to the blanks, the side and end panels can be trimmed to their finished size. The width of the side and end panels (which is actually the height of the box) is the same on all four panels. To trim the panels to width, place the hardwood edging strip (C) of each blank against the table saw rip fence and cut each panel to a finished width of 21 1/16", see second step in Fig. 1.

After the panels have been cut to the same width, the next step is to cut them to length. Start by cutting the side panels (A) to a finished length of 20½", see Fig. 2. Next, since the end panels (B) will sit in ½"-deep rabbets, cut them 1" longer than the side panels (21½"), see Fig. 2.

GROOVES. Once the side and end panels have been trimmed to size, the next step is to cut a groove in each piece to accept the bottom of the toy box. Before cutting the grooves, take a minute to orient the pieces, see Exploded View, page 7. On the side panels (A), the edging strip is on the *bottom*. On the end panels (B), the strip is located on *top* to hide the exposed plywood edge.

The ⅜"-deep grooves are located on the *inside* faces of the panels, 1½" up from the bottom edges, see Fig. 2a. I used a ¾"-straight router bit to cut these grooves. (You could use a table saw and an adjustable dado blade set to the thickness of the plywood.)

CUT THE RABBET. Next, to join the end panels to the side panels, rout ¾"-wide by ½"-deep rabbets on the *inside* faces of both side panels (A), see Fig. 3a.

BOTTOM. With the side and end panels complete, the next step is to make the **bottom (D)**. To determine the size of the bottom, dry clamp the side and end panels together and measure the inside width and length. Next, add ¾" to each dimension so the bottom will fit into the ⅜"-deep grooves in the panels. The bottom can now be cut from a piece of ¾"-thick plywood (mine measured 21¼" x 19¾").

ASSEMBLY. Begin assembly by gluing one end panel (B) into the rabbets of the side panels (A) to form a U-shaped subassembly, see Fig. 4. Next, slide in the bottom (D) and secure the end panel to the sides with 1½" finishing nails see Fig. 4a. Finally, glue, clamp, and nail the other end panel in place.

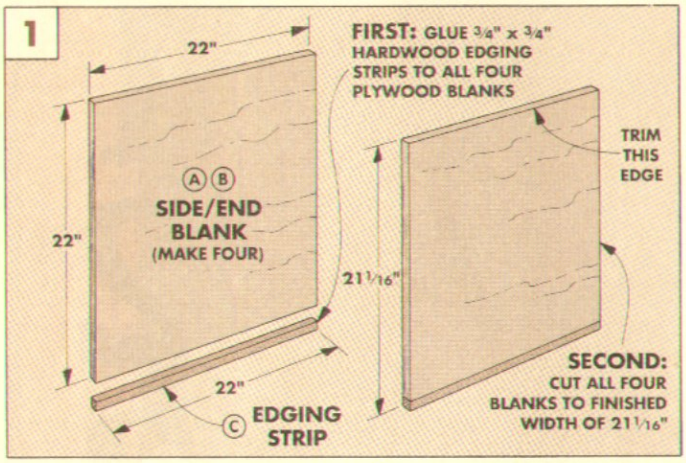

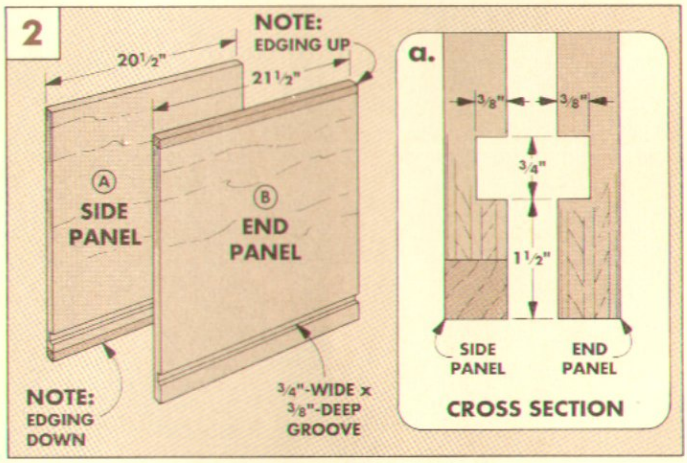

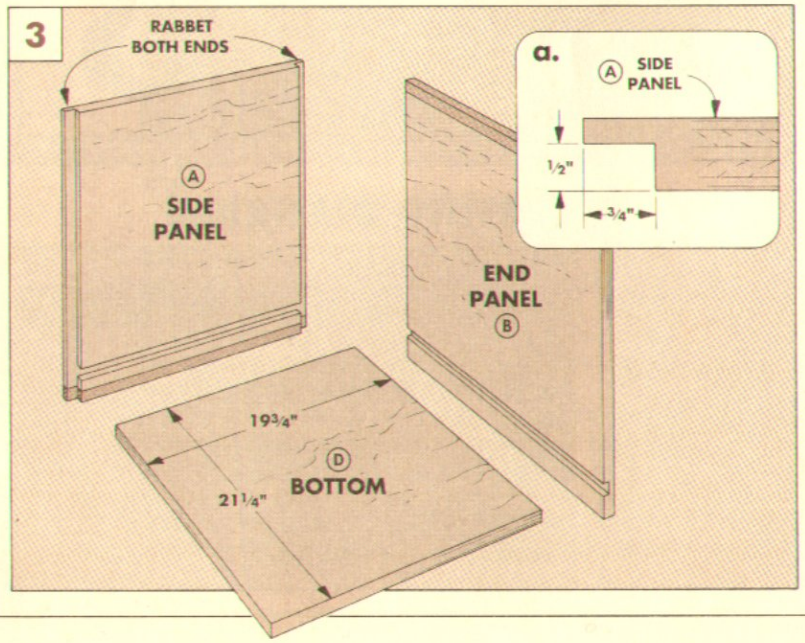

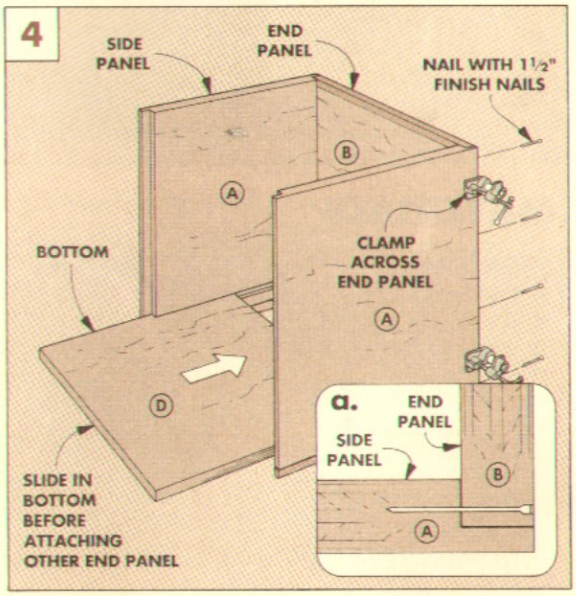

FRAMES

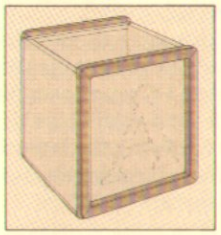

Once you've assembled the box, work can begin on the frames. The frames hide the exposed plywood rabbet joints and give the toy box its building block look.

CUT FRAME PIECES. Start by ripping eight **frame pieces (E)** to a finished width of 2" and a rough length of 24". Next, miter the ends of the frames so their finished length (long-point to long-point) equals the distance across one end of the box, see Fig. 5. (In my case this measured 22".) Note: The top and side frame pieces will extend 15/16" above the end panels (B) so they'll be flush with the tops of the lids once they're installed, refer to Fig. 18.

ATTACH FRAMES. After the frames have been mitered to size, they can be glued to the ends of the box. Start by gluing and clamping one frame piece flush to the bottom of the box, see Fig. 5. Next, glue two upright frame pieces flush with each side panel. Finally, glue the top frame pieces in place. (I used C-clamps to hold these.)

ROUND OVER EDGES. After the frame pieces are glued on, the next step is to rout a radius on the top corners of each frame, see Fig. 6. I did this with a router and a 3/4" round-over bit. (For more on this technique, see Shop Notes on page 16.) Then, I used the same bit to round over the bottom edges of the sides, see Fig. 6 and also page 16.

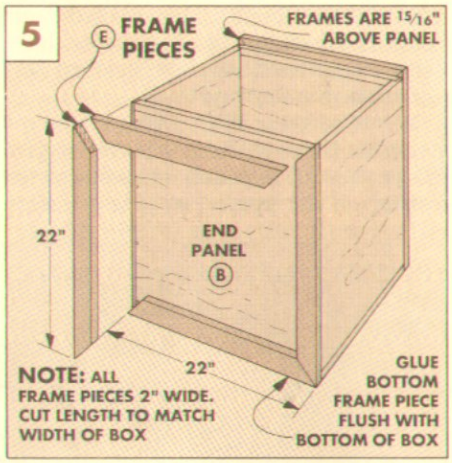

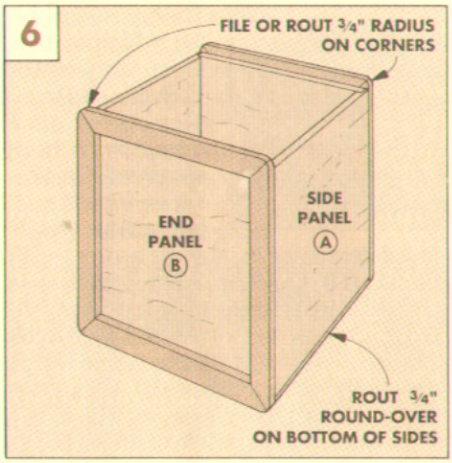

Shop Note: I chose the 3/4" round-over bit because it provides a smooth transition between the hardwood edging strips and the plywood. If you don't have this bit, you could use a 1/2" round-over bit.

DECORATIVE EDGE. After the 3/4" radius is routed, rout a 1/4" round-over with a shoulder on the inside and outside edges of the frames, see Fig. 7. This shoulder provides a crisp edge for masking and painting the faces of the frames later.

To rout the decorative edge, adjust the router bit so it just clears the surface of the end panel (B), see Fig. 7. When routing the inside edge of the frames, move the router in a clockwise direction. On the outside edges of the frames, move the router in a counterclockwise direction, see Fig. 8. Shop Note: To help keep the router from tipping into the panel, I placed a 3/4"-thick temporary spacer inside the frame, see Fig. 8.

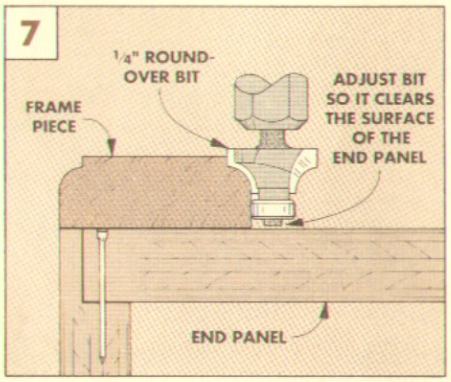

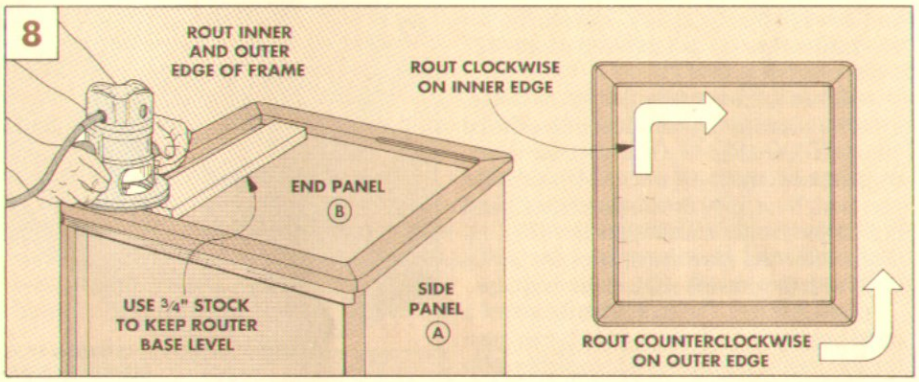

FALSE BOTTOM

A false bottom can be added to make the toys accessible for smaller children.

The size of the **false bottom (F)** can be determined after the box is assembled. Start by measuring the inside dimensions, see Fig. 9. Then subtract 1/4" (for the shelf brackets) from the width and length and cut the bottom (mine measured 18 3/4" x 20 1/4"). Next, so you can pull out the bottom, drill a 1" finger hole, centered 2" from one edge.

SHELF BRACKETS. The false bottom rests on L-shaped shelf brackets. These brackets are mounted in a series of four 1/4" holes that are drilled into the inside face of *each* end panel (B), see Fig. 10.

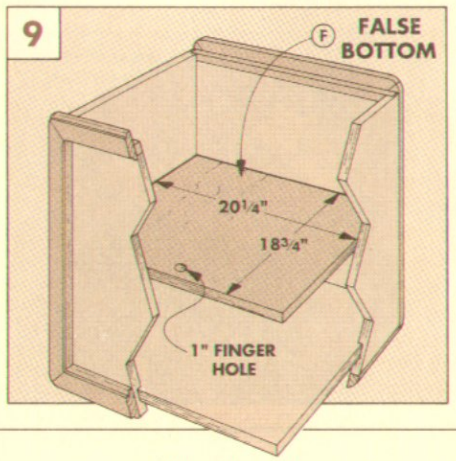

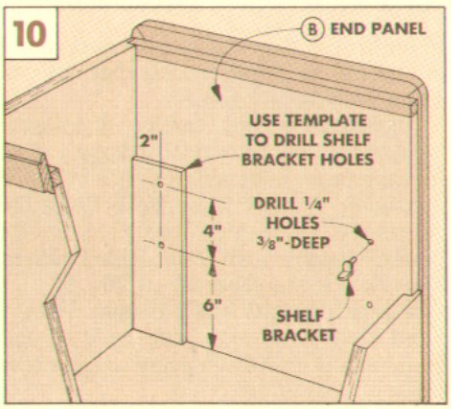

THE LIDS

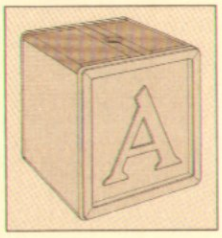

The toy box has two lids which open up from the center. Each lid consists of a plywood panel edged with hardwood, see Fig. 11.

LID PANELS. I began the lids by first determining the size of the plywood **lid panels (G)**. To determine the length of the panels, start by measuring the *inside* distance between the two mitered end frames. Then, subtract 1/4" for clearance and 1 1/2" for the two 3/4"-wide end caps (H). (In my case the panels were 18 3/4" long, see Fig. 11.)

To determine the width of the lid panels, measure between the *outside* faces of the side panels (mine measured 22"). Now, subtract a total of 5 5/8" (4" for two pull strips (J), 1 1/2" for two hinge strips (I), and 1/8" for the center gap between the lids). Then, divide this measurement in half to get the width of each panel (in my case, 8 3/16" wide). Now cut the two panels to size, see Fig. 11.

EDGING STRIPS. The edging strips that surround the lid panels hide the plywood edges. I ripped all the hardwood strips to the same thickness as the plywood (3/4"). Then, cut four **end caps (H)** to a finished width of 3/4" and a rough length of 9". Next, cut two **hinge strips (I)** to a finished width of 3/4" and a rough length of 21". And finally, cut two **pull strips (J)** to a finished width of 2" and a rough length of 21".

ASSEMBLY. After cutting the pieces to size, glue the end caps (H) onto the ends of the lid panels (G), see Fig. 11. Once the glue is dry, trim the end caps flush with the edges of the plywood. Next, glue the hinge strips (I) and pull strips (J) onto each lid panel, see Fig. 11. Then, after the glue dries, trim the strips flush with the outside edge of the end caps.

HANDLE PULL. The next step is to cut a hand hole in the pull strips so kids can open the lids easily. Clamp the lids together with the ends flush and the pull strips (J) facing each other, see Fig. 12. Then, mark the center of the lid and lay out a 3" diameter circle. Next, cut out each half-circle and then sand the edges smooth, see Fig. 13.

HINGE STRIPS. With the pull strips complete, the next step is to round over the hinge strips (I) to match the radius on the corners of the frames, see Fig. 13. Here again, I used the 3/4" round-over bit.

SOFTEN EDGES. After rounding over the hinge strips, I removed the sharp edges on the lids. To do this, use a 1/4" round-over bit to soften the hand hole in the pull strips (J), see Fig. 13. I also rounded over the bottom inside edges of each lid (except for the bottom of the hinge strips), see Fig. 13.

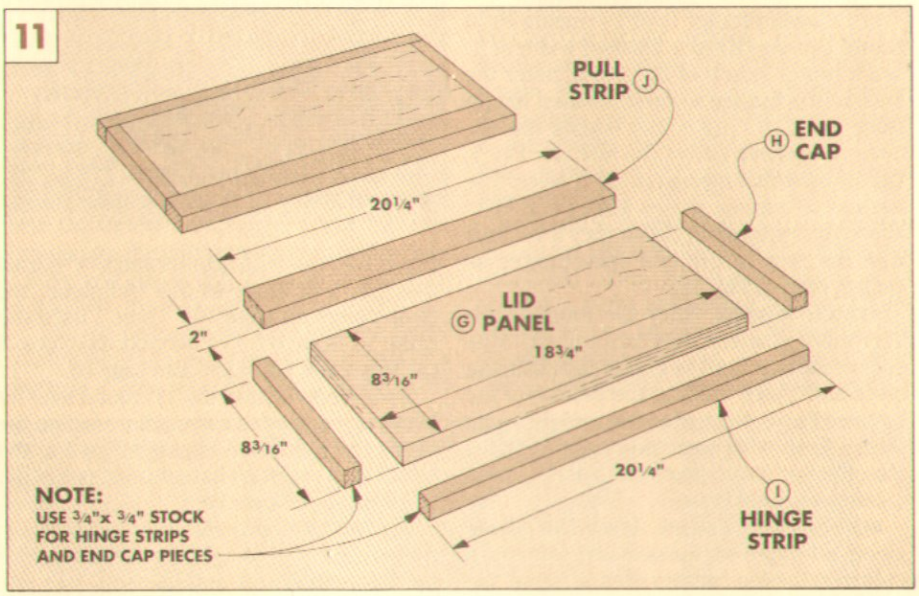

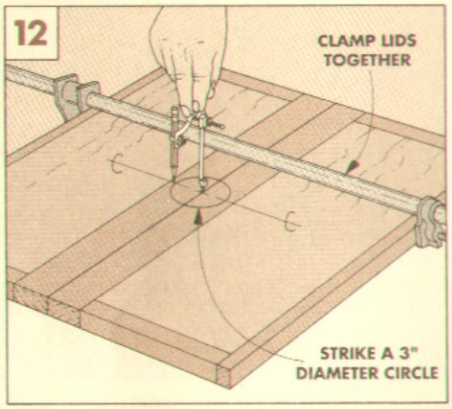

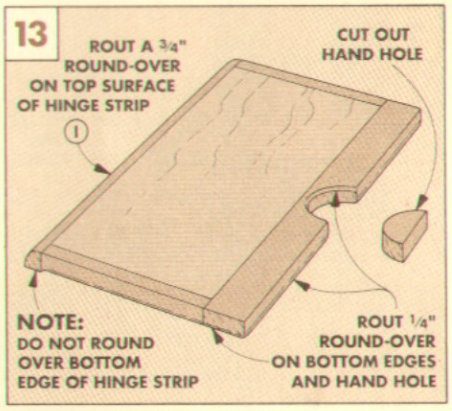

LETTER & NUMBER

After the lids are complete, the next step is to cut out the letter and number that are glued onto the end panels.

TRANSFER PATTERN. Start by enlarging the desired patterns, see Exploded View, page 7. Next, transfer both patterns onto 1/4"-thick Masonite. (I chose Masonite because the edges tear less than plywood.) I used 3M's Spray Mount to glue the enlarged pattern directly onto the Masonite, see Fig. 14.

CUT OUT LETTER AND NUMBER. Next, I used a sabre saw to cut out the letter and number and then sanded any rough edges smooth, see Fig. 15.

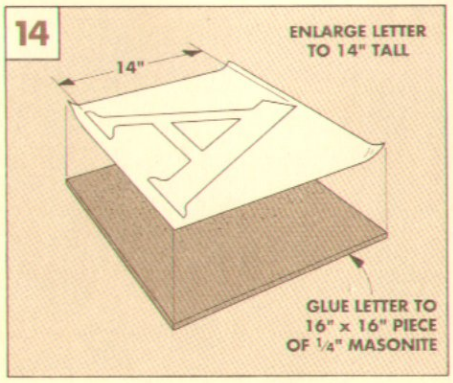

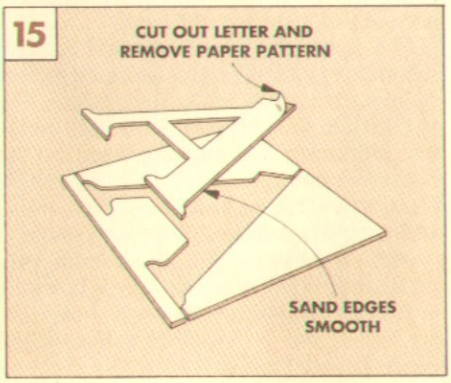

FINISH

Before I glued the letter and number to the end panels, I applied a finish to the toy box. To achieve the look of a kid's building block, the end panels and the faces of the frames are painted, see Fig. 16.

MASKING. Before the end panels can be painted, the toy box must be masked off.

Start by masking off each end panel (B) where the letter or number will be located to provide an unfinished surface to glue to. To do this, center a letter or number on each end panel and trace lightly around it, see Fig. 17. Then, mask off a rough area within the traced outline.

Next, I masked off the edges and faces of the frame pieces, and covered the rest of the box with newspaper.

PAINT PANELS. After the panels are masked off, paint can be applied. I sprayed on two coats of white gloss enamel from an aerosol can. After the second coat is dry, remove the masking materials.

PAINT FRAMES AND LETTER/NUMBER. The next step is to paint the faces of the frames and the letter or number with a bright color. Before the paint can be applied to the face of the frames, the edges of the frames must be masked off, see Fig. 16a. To do this, run a strip of masking tape around the molded edges of the frames. Then, mask off the end and side panels. Once this is done, paint the raised face of each frame and the letter or number with the same color. (I used red and blue gloss spray enamel.)

ATTACH LETTER AND NUMBER. With the painting complete, remove all the masking materials and glue the letter and number onto the end panels.

APPLY POLYURETHANE. Finally, apply two coats of gloss polyurethane to the entire toy box (including the painted areas), sanding lightly between the coats.

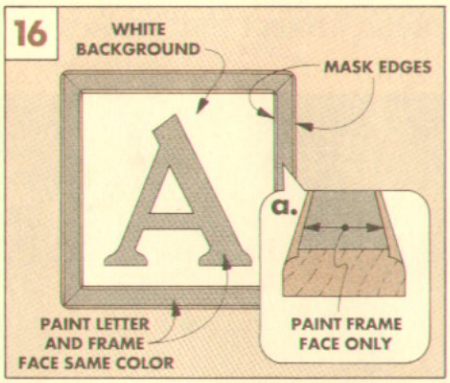

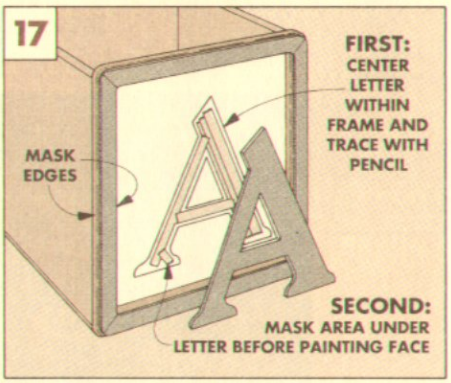

HARDWARE

The final step is to attach the lids (with piano hinges), the lid supports and the casters.

INSTALL HINGES. I screwed piano hinges on the side panels (A) and then attached the lids to the hinges. Start by cutting the 1½"-wide piano hinges to fit each side panel and screw them in place, see Fig. 18. (I used a self-centering hinge bit to drill the hinge screw holes, see Talking Shop, page 24).

LEVEL LIDS. To make positioning of the lids easier, I first leveled them flush with the top of the toy box. Since the lids sit on hinges, two **leveling pads (K)** are attached to the top edge of each end panel (B), see Fig. 18.

To do this, cut the pads the same thickness as the hinge knuckles (mine measured 3/16" thick) and 2" long. Then, center the pads on the end panels and nail them in place with small brads, see Fig. 18a. Finally, apply a coat of polyurethane to the leveling pads.

ATTACH LIDS. Once the pads are in place, the lids can be screwed to the hinges. To mark the hinge screw hole locations in the ends of each lid, I used locator pins, see Shop Notes, page 17. Position the lids on the hinges so the side-to-side gaps and the gap between the pull strips (J) are the same.

After the end hole locations are marked, drill a pilot hole for each screw. Then, secure each lid with two No. 4 x 5/8" woodscrews. Next, drill the remaining pilot holes with the hinge bit and install the rest of the screws.

INSTALL LID SUPPORTS. Once the lids are fastened, the lid supports can be installed. The lid supports I chose have three features that I really like. First, they ease the lids down slowly. Second, they're adjustable so as kids get older, the lids can close faster. Third, the supports have a detent position that "locks" the lids open. To install the supports, lay out the hole locations on each lid and end panel (B), see Fig. 19. Then, drill pilot holes (I used the hinge bit again) and fasten the supports in place.

INSTALL CASTERS. Finally, to make the toy box easy to move around, I installed casters on the bottom (D). Attach a caster 1½" in from each inside corner, see Fig. 20.

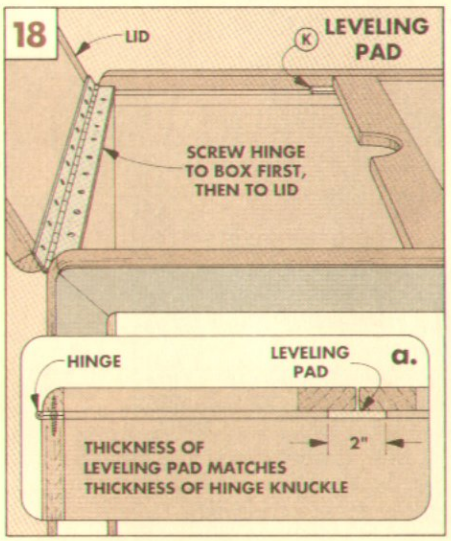

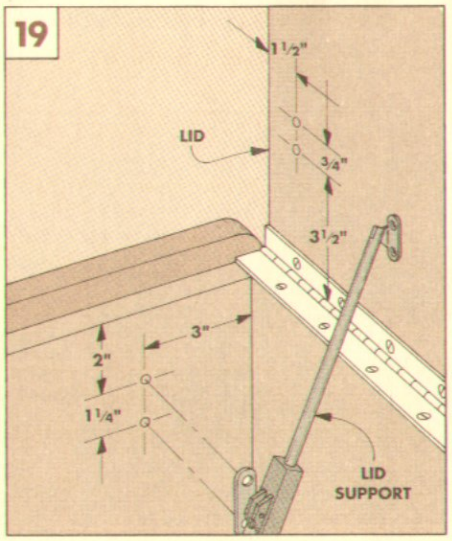

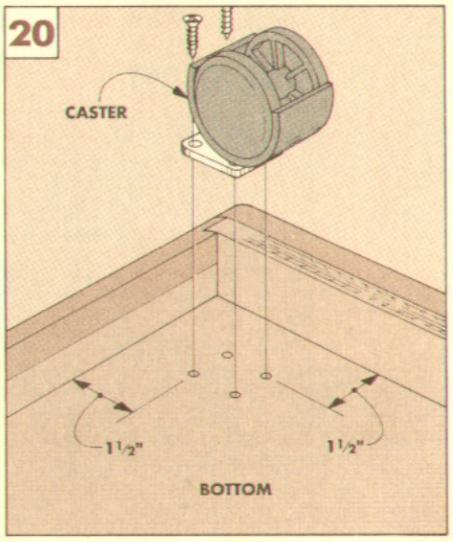

Hand Mirror

The trick to cutting the top of this mirror to a perfect circle revolves around a simple pivot pin. Once you know the secret, it's an easy weekend project that makes a great gift.

There were a couple of challenges in making this hand mirror. First, I had to figure a way to cut the outside top edge to a perfect circle. And then how to rout a circular recess for a round mirror.

The solution to both of these problems is to use a pivot pin and a router. By rotating the router around the pin, you can rout perfect circles. Then, by varying the distance between the bit and the pin, you can rout two concentric circles.

Another challenge (and this one's optional) is carving the initial on the back. To "carve" the initial I used a router and straight bit, and then textured the background by hand. On page 15 we've included step-by-step instructions for this procedure.

PATTERN

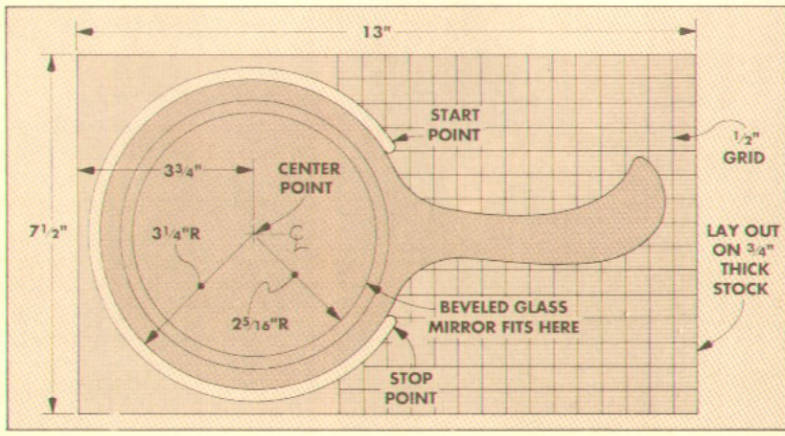

The mirror shown in this pattern is for a right-handed person. That is, it's to be held in the left hand while using the right hand for combing hair. For a left-handed person, cut out the pattern and flip it over so the handle turns the other way.

Woodsmith Project Supplies is offering a full-size pattern and all twenty-six alphabet letters, as well as the beveled glass mirror. For more information, see page 31.

NEW ROUTER BASE PLATE

The first step in making the hand mirror is to replace your router base plate with a shop-made plate. The new plate needs to be larger than the original so it can be set over a pivot pin. Then it's used for routing the circular shape around the top of the hand mirror and recesses for the glass mirror and carving.

BASE PLATE. I cut the new base plate from a piece of 1/4" Plexiglas (or use Masonite) to a width of 6" and 7 1/2" long, see Fig. 1.

Now, center your router's original base plate over the new plate and use it as a template to locate the mounting holes and bit hole. Then drill these holes and mount the plate to your router.

PIVOT HOLES. Next, drill two 1/16"-dia. holes (A and B) in the new base plate, see Fig. 1. These holes will fit over a pivot pin (17 gauge brad) that's driven into the workpiece.

To locate the holes, first mount a 1/4" straight bit in the router. Drill one hole (labelled A) 3 1/4" from the outside edge of the bit, see Fig. 1. This hole will be used to guide the router when routing (cutting out) the circular outside edge of the mirror blank.

Now drill a second hole (B) 2 5/16" from the edge of the bit, see Fig. 1. This hole will be used when routing the circular recess on the front of the workpiece for the beveled glass mirror, and on the back to form a border for the carved initial.

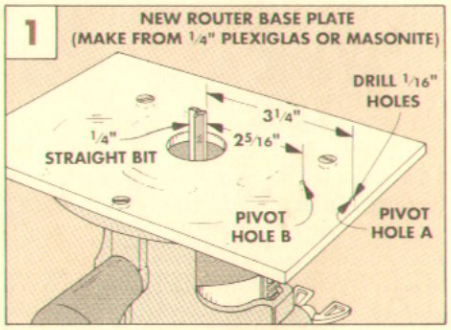

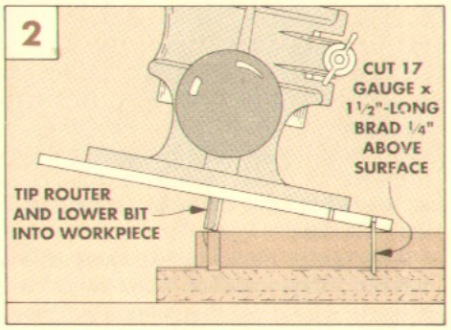

ROUTING STEPS

After the new base plate is complete, you can use this set-up to cut out the top of the hand mirror and rout the recesses.

MIRROR BLANK. To make a hand mirror, start by cutting a 3/4"-thick blank to a width of 7 1/2" and length of 13", see the Pattern on the opposite page. Then lay out the pattern on the blank.

To keep the router bit from cutting into my bench when routing all the way through the blank, I screwed the blank (in the waste section) to a piece of plywood and then clamped the plywood to the bench, see Fig. 3.

PIVOT PIN. Next, drill a 1/16" hole for the pivot pin all the way through the blank at the centerpoint of the circle. (If you aren't going to carve the back, drill the hole only 3/8" deep.) Now drive a 17 gauge brad through the hole and into the plywood (or blank). Then snip off the brad 1/4" above the surface.

OUTSIDE EDGE. With the pivot pin in place, you're ready to begin routing. First, cut out the outside edge of the mirror by making repeat passes with the router and a 1/4" straight bit, see Fig. 3. Since you don't want to rout a complete circle (or you would cut off the handle), mark start and stop points short of where the circle turns into the handle.

Next, set the bit 1/4" deep and drop the base plate hole that's farthest from the bit (hole A) over the pivot pin. Then, tip the router at a slight angle so the bit is directly over the start point and turn on the router, refer to Fig. 2. (Note: If you're using a plunge router, you won't have to tip the router.)

Now, slowly plunge the bit into the blank. Then pivot the router around the circle until you reach the stop point.

Repeat this process, lowering the bit 1/4" (or less) between passes until the bit cuts through the blank, see Fig. 3a.

ROUT MIRROR RECESS. Next, to rout the recess for the mirror, reset the bit 5/16" deep, and position the other pivot hole (B) over the brad. Now rout a *complete* circle, see Fig. 4. (This will rout a groove slightly larger in diameter than the glass mirror to allow for wood movement.)

CLEAN OUT WASTE. After the perimeter of the recess was routed, I reset the router to 1/4" deep and removed the pivot pin. Then I cleaned out the waste freehand, see Fig. 5. (This creates a 1/16"-deep trough for glue squeeze-out, see Fig. 5a.)

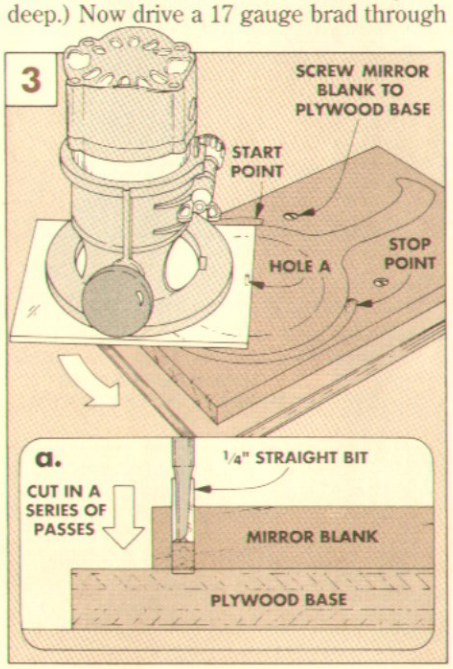

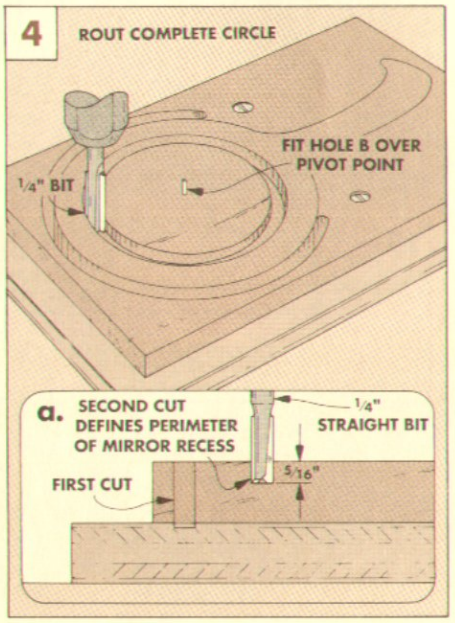

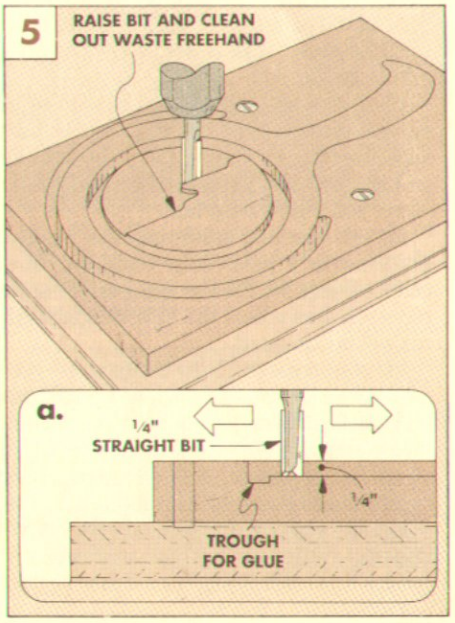

FINISHING THE MIRROR

After the recess for the beveled glass mirror is cleaned out, you can cut the blank to final shape. But first, I routed a decorative chamfer around the edge of the recess.

CHAMFER. To rout the chamfer, I used the same technique as before (routing with a pivot pin), see Fig. 6. To do this, drive the brad back into the hole in the center of the mirror recess.

Then mount a V-groove bit in the router and lower the bit to cut 1/4" deep, see Fig. 6a. (You can't use a chamfering bit with a bearing since the bearing won't clear the bottom of the recess.) Next, position the router base so the hole closest to the bit (pivot hole B) sets over the pivot pin.

Now turn on the router and plunge the bit into the workpiece. Then rotate the router in a counterclockwise direction. This should rout a chamfer around the recess with a face that's 1/8" wide.

After the chamfer is routed, the blank can be removed from the plywood. (Note: If you plan on carving the initial on the back side, turn the blank over and rout the perimeter of the carving at this time with a straight bit. See the step-by-step instructions for carving on the opposite page.)

CUT TO SHAPE. Once all of the routing is complete, the handle can be cut to shape on the band saw, see Fig. 7. I started by cutting about 1/16" outside the layout line.

SAND TO FINAL SHAPE. Next, mount a sanding drum in the drill press and sand up to the outline of the handle, see Fig. 8. Don't sand the circular (top) part of the mirror or you may gouge it out of round. Just sand so there's a smooth transition between the mirror circle and the handle, see Fig. 8a.

BULLNOSE EDGE. After the handle was sanded to final shape, I routed a soft bullnose profile all the way around the entire piece, see Fig. 9. To do this, mount a 1/2" round-over bit in the router table and set it 5/16" above the table, see Fig. 9a.

Then rout both the top and bottom edges of the mirror. After routing, lightly hand sand the edge to remove the flat spot at the center, but don't round over the edges. Here, you want a crisp line.

FINISH. Before mounting the beveled glass mirror, I finished the wood with three coats of tung oil. Do *not* apply finish to the recessed area where the beveled glass mirror will be mounted.

GLUE IN MIRROR. Now the beveled glass mirror can be glued in place. I used Dow Silicone Sealant and applied a thin bead onto the recess, see Fig. 10. (Silicone sealant is elastic and will allow the wood to expand and contract with changes in humidity.)

Finally, position the beveled glass mirror into the center of the recessed area and press it down firmly into the silicone sealant, see Fig. 10a.

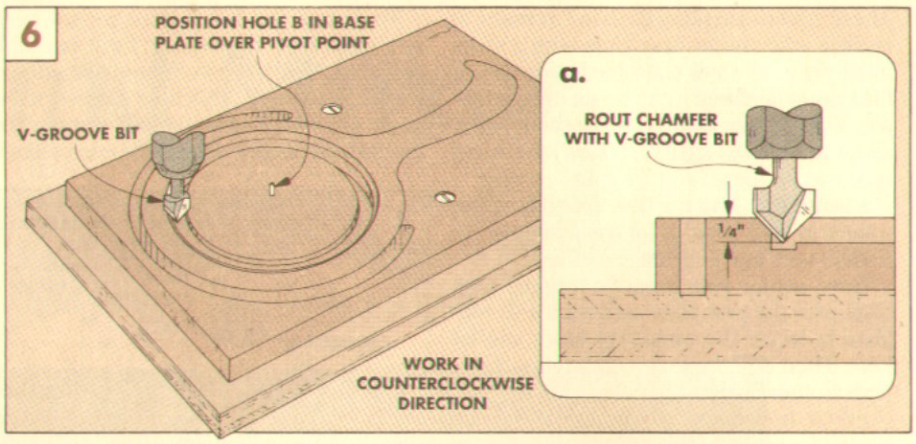

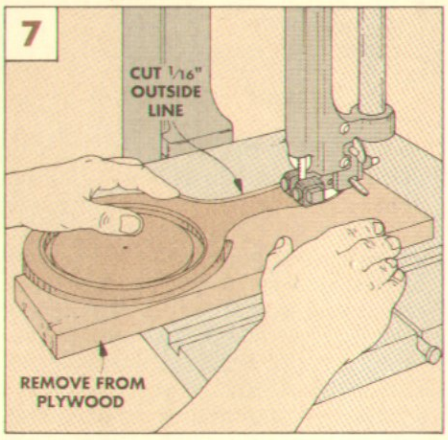

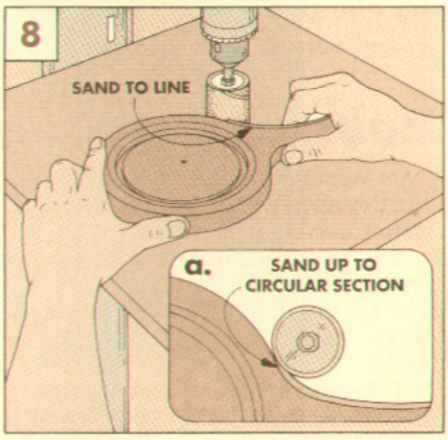

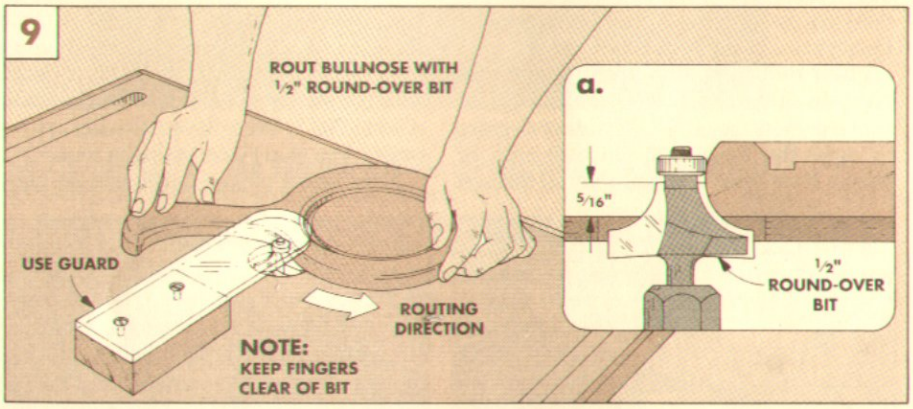

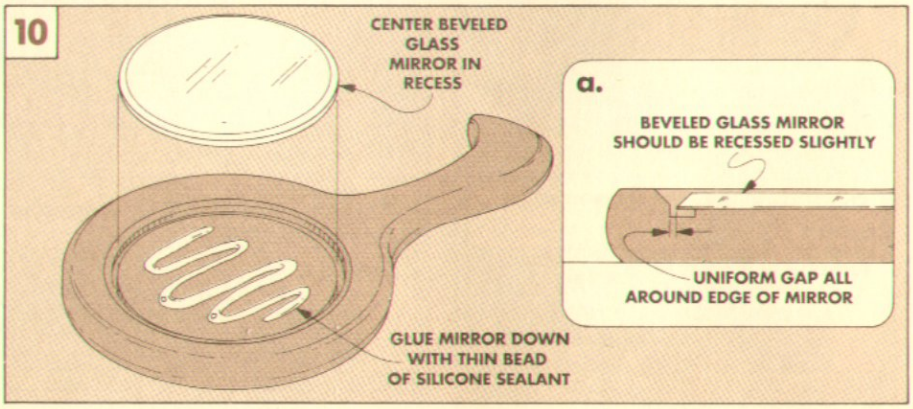

Routing Letters

Carving an initial on the back of the mirror makes it a more personal gift—yet the carving isn't all that difficult. In the steps below, I've done almost the whole job with a router.

Full-size patterns of the letters at the bottom of the page are available from *Woodsmith Project Supplies*, see page 31. They come printed with a centerline and centerpoint, so they're easy to align.

LETTER ALIGNMENT. To align the letter, first draw a centerline down the back of the mirror through the pivot pin. Next, press the centerpoint of the letter pattern down over the pivot pin. Then, align the centerlines on the pattern and the mirror back. Now the pattern is in position to be glued down.

STIPPLING. To enhance the letter, I stippled or dotted the background with a nail set, see photo. I found that by firmly tapping a 3/32" nail set, I created a very different look than I got from lightly tapping a 1/16" nail set. So try a couple different combinations of nail set sizes and depths on a scrap piece to see which you like best. The trick to a good background is uniform dot placement and depth.

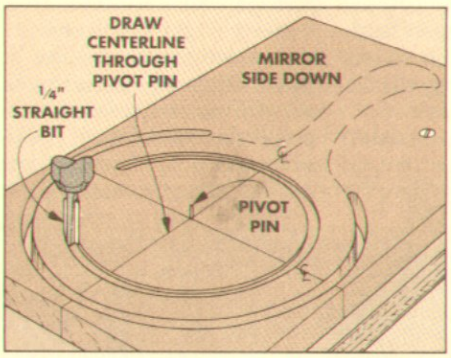

1 *To rout perimeter of the recess for an initial, screw blank to plywood with mirror side down. Rout a 1/16"-deep circle by setting pivot hole "B" on the pivot pin.*

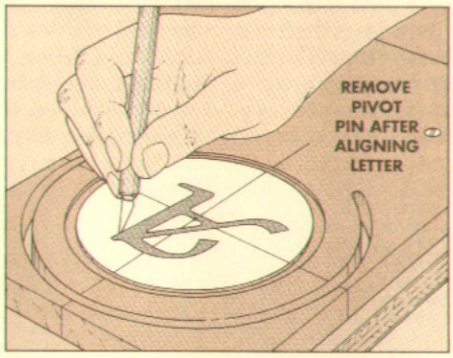

2 *Align letter pattern in circle and glue with rubber cement or spray adhesive. Cut around outside edge of the letter with a sharp knife. Discard background.*

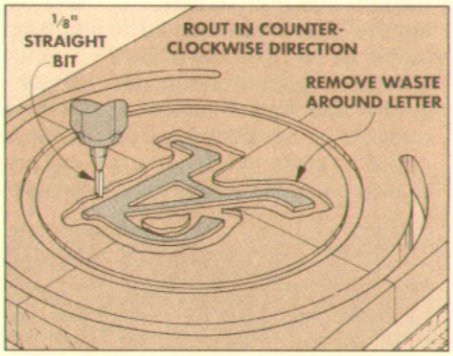

3 *Mount a 1/8" straight bit in router and set 1/16" deep. Make a freehand pass around the outside edge of the letter. Get as close as possible without touching the letter.*

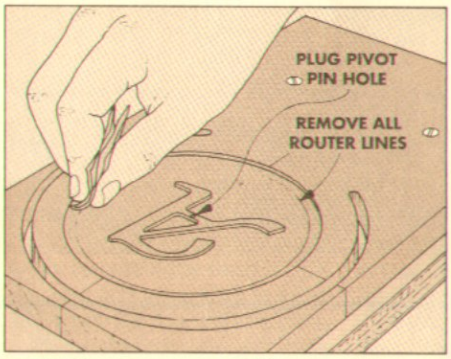

4 *Remove waste with same 1/8" router bit, and then peel off letter pattern. Plug pivot pin hole with sliver from edge of blank. And sand recessed area level.*

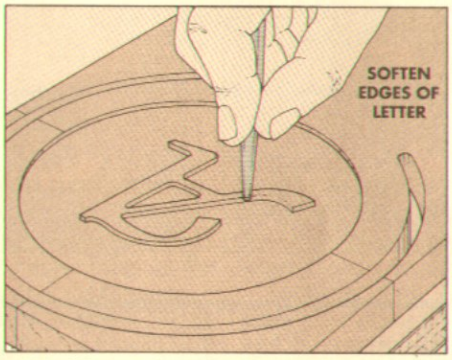

5 *Next, soften the edges of the letter. To do this, hold the side of the nail set at a slight angle and rub the sharp edges of the letter until they're rounded.*

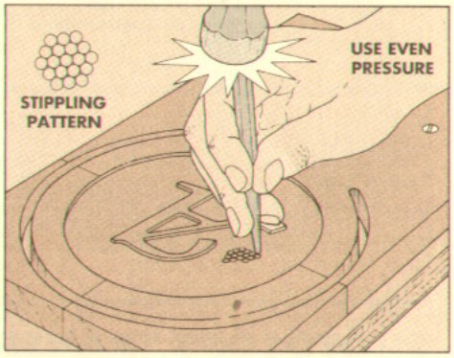

6 *Finally, stipple or dot the background, using a 3/32" or smaller nail set. Hold the nail set upright and tap firmly with a hammer.*

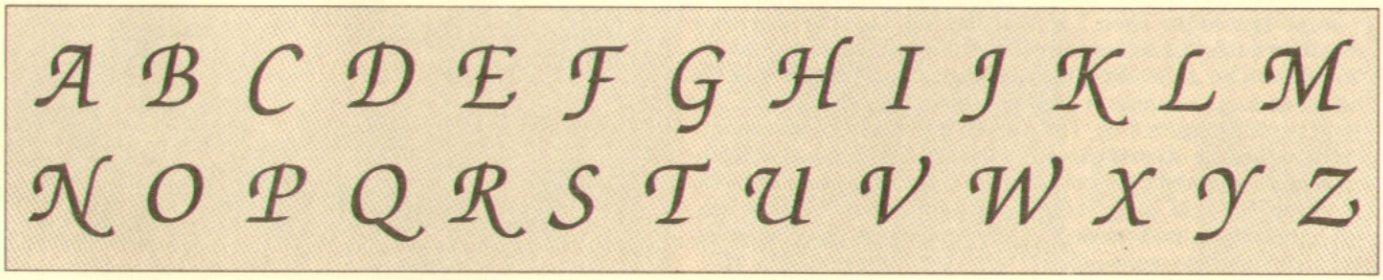

Shop Notes

ROUTING A CORNER RADIUS

■ As I was making the Toy Box shown on page 6, I had to rout a large radius on the corners of each side frame. Ordinarily you can use a band saw, sabre saw, or a rasp to rough cut the radius, and then sand it smooth.

Doing this freehand works fine when you only need to radius a couple of corners. But for the Toy Box, I wanted to radius all four corners of both frames — eight radius cuts altogether. And, since I wanted the radius to be a perfect arc, I decided to make them using a round-over bit in the router.

CHIPOUT PROBLEMS. Since the round-over bit (in this case a large ¾" bit) forms the radius by cutting *across* the corner — rather than *around* the corner — there's a tendency for the wood to split away on the outfeed side of the workpiece. But there's a way to prevent this, and also to keep the router from tipping on the edge of the frame.

SCRAP "SANDWICH." The trick involves sandwiching the workpiece between two pieces of scrap, see Fig. 1. The router will still produce chipout, but on the scrap pieces, not the workpiece.

Shop Note: To rout the radius on the Toy Box, I first made a replacement base of ¼" Masonite for the router. (Most router bases aren't pre-drilled to accept a ¾" round-over bit.)

TOP FRAME CORNERS. To rout the radius on the top corners of the frames, first clamp two square-cornered pieces of scrap across the corner, see Fig. 1. Then rout the radius in several light passes, lowering the bit slightly between passes.

BOTTOM CORNERS. I routed the bottom corners next, but did them a little differently. Here the router can ride along the bottom edge of the side piece, but still needs support to avoid tipping. So I fit a scrap piece in the recess of the bottom, see Fig. 2.

To avoid the problem of chipout, first back-rout the outfeed side. This involves making the first router pass across the final inch or two of the outfeed (right-hand) end in a right-to-left motion, see Fig. 2a. Then, when the router is fed across the workpiece in the proper direction (left-to-right), it won't split a chunk off the frame as it exits from the cut, see Fig. 2.

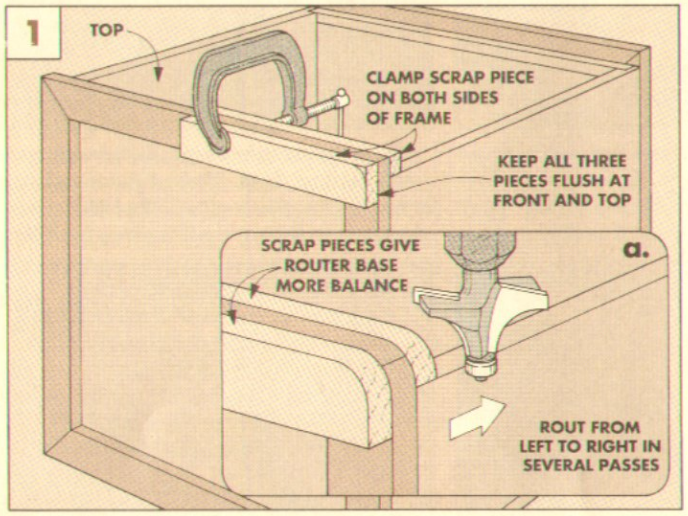

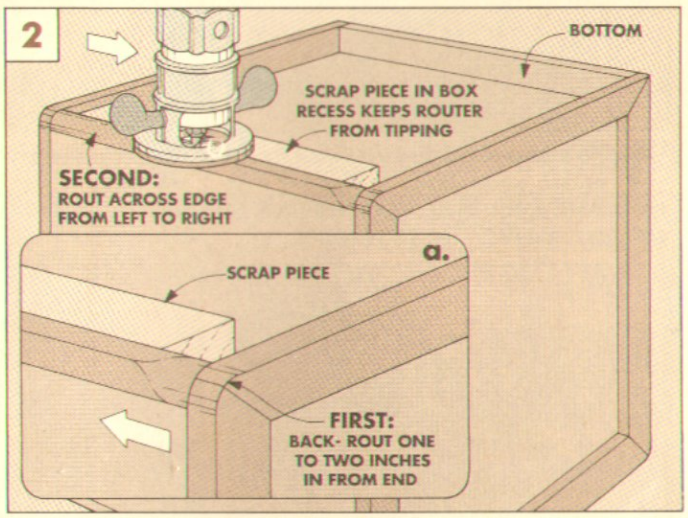

PHOTOCOPY TRANSFER

■ When it came time to carve the lid for the Music Box, I wanted to make a few practice designs, but I didn't want to redraw them.

HEAT TRANSFER. Then I remembered a tip that appeared in *Woodsmith* No. 45 involving the use of an iron to transfer a pattern from a photocopy. The secret is the type of toner photocopiers use — it's heat sensitive. By reapplying heat, some of the toner transfers to the workpiece.

I found it best to make a dark copy, which puts more toner on the paper.

HOW TO. To use this technique, set the iron on it's highest setting and tape the photocopy face down on the workpiece.

Then, "iron" the back of the photocopy until some of the toner releases from the paper.

Note: This technique will produce a mirror image. For an explanation of how to get a non-mirrored image (such as for letters), see *Woodsmith* No. 47.

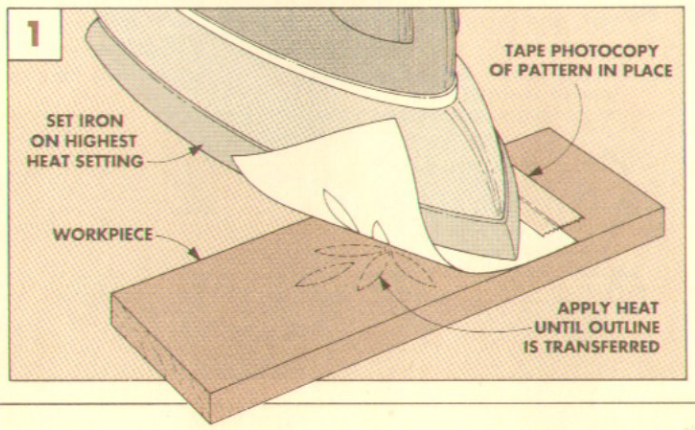

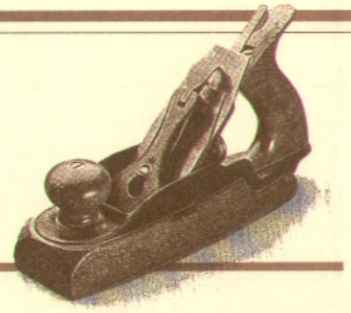

IRONING VENEER

■ When making the Music Box shown on page 18, I wanted to dress-up the lid with a piece of walnut burl veneer.

PROBLEMS. Applying veneers can be a time-consuming process. First, since the veneer is seldom flat, it has to be flattened before you can use it. This part of the process alone can take several days.

Also, once the veneer is flat, it's glued down and held in place with a veneer press until the glue dries. But, because very little air can get to the glue when it's in the press, it may take 24 hours for the glue to dry completely.

PAPER-BACKED VENEER. To speed up the process, I took a couple of short cuts. First, I used a paper-backed flexible veneer. This type of veneer requires no flattening. That's because the veneer is laminated to a sheet of paper which keeps the veneer flat and intact.

GLUING ON VENEER. Since I didn't want to wait 24 hours for the glue to dry, I came up with a technique for speeding up the drying time — I used an electric clothes iron.

The iron provides a source of heat that causes the water in the glue to evaporate quickly.

IRON. Before applying the veneer, turn the iron to a medium heat setting (about "cotton" on my iron). The iron I use is an older model that doesn't have any steam holes in the bottom. If you have a newer model with steam holes, make sure the steam setting is turned off. Note: To keep from getting glue on the base of the iron, you may want to cover it with aluminum foil.

While the iron is warming up, cut the veneer so it's slightly larger than the workpiece. Then apply glue to the workpiece. (I use yellow woodworking glue.) Use just enough glue to "butter" the surface, so the grain pattern barely shows through.

TACK ONE CORNER. Once the glue is applied, all that's left is to iron down the veneer. To do this, start by placing the veneer on the glued workpiece, see Fig. 1. Then, to keep the veneer from moving, I place the iron over one corner until the veneer stays put.

Now, with the corner "tacked down," move the iron slowly back and forth across the piece until the glue is set.

Note: Leaving the iron in place may cause the veneer to burn.

Finally, flip the workpiece over and, using a sharp knife, trim the veneer flush with the sides, see Fig. 2.

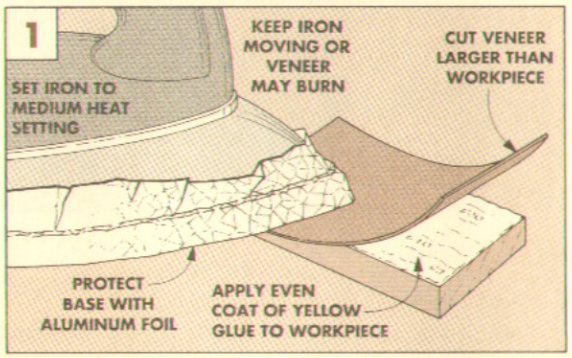

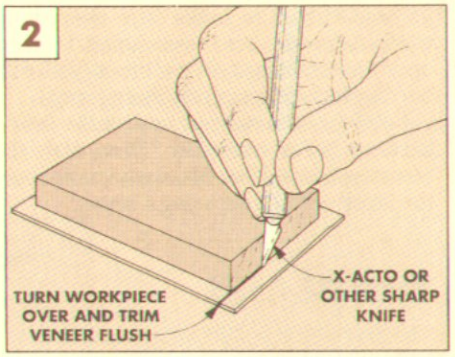

LOCATOR PINS

■ I came across a common problem while I was attaching the lids to the Toy Box case. I had already mounted the hinges onto the case and needed to pre-drill and screw the lids to the hinges.

The problem is you can't mark the hinge hole locations on the lid once the lid is set in position. I needed a way to locate the exact center of the hinge holes on the lids without opening them up.

MADE FROM SCREWS. To do this, I made locator pins by cutting off most of the threads on a couple of extra hinge screws. Then, I filed the cut ends of the screws to a fine point, see Fig. 1.

USING THE PINS. To use the locator pins, place one pin in the end holes of the hinge and close the hinge flap, see Fig. 2. Next, position the lid on the case and press down so the pins leave impressions on the inside of the lids. Then, open up the lid, remove the locator pins, and drill the pilot holes.

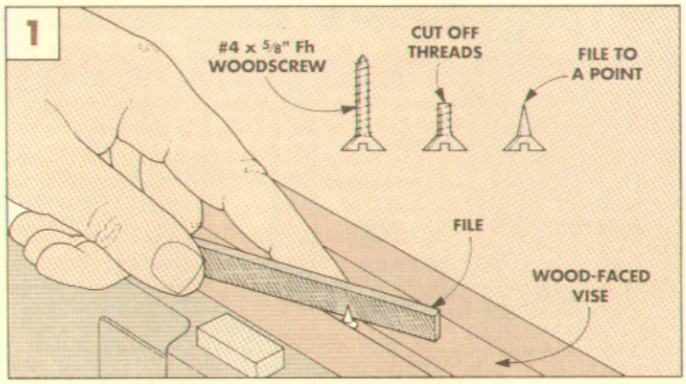

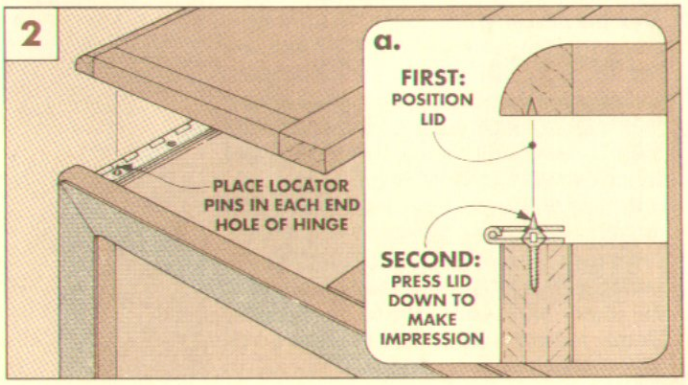

Music Box

You have to plan ahead, even on a small box like this. The sides are routed to shape first. Then you can try your hand at two different styles for the lid.

The real reason I wanted to build this music box was to experiment with two techniques I seldom get the chance to try — working with veneer and chip carving. It was great fun to try these techniques on the small lid, and I didn't have to worry about a major effort. (For more on these techniques, see Shop Notes on page 17.)

Another challenge was trying to figure out a way to get the music works to start when I opened the lid and to stop when I closed the lid. The secret is a small pin connected to the wire shut-off arm of the music movement.

The overall secret to making this project go smoothly is to make sure everything works *before* the box is assembled. I wound up dry-assembling it several times (with rubber bands) before actually gluing it up.

I also found it best to sand all the inside surfaces *before* assembly. Then, after the box is assembled, I used a spray can to apply the finish rather than using a brush.

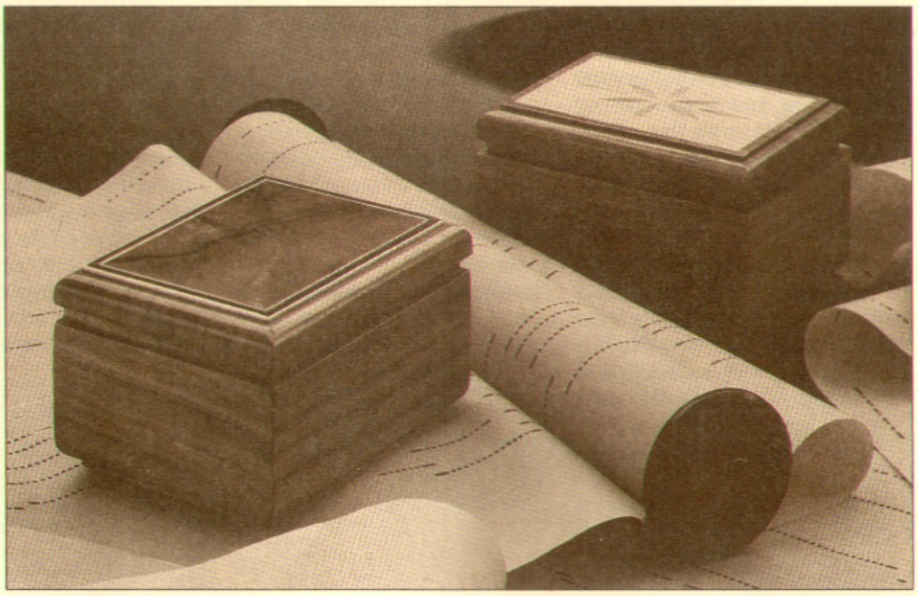

THE BLANK

The first step in building the music box is to make the front, back and side pieces. Instead of routing four individual pieces, it's safer to rout a single long blank, then cut off four pieces to length.

To make the blank, start with a ½"-thick piece of stock. Rip the stock to a finished width of 2⅛" and a rough length of 24".

ROUND OVER EDGE. After the blank is cut to size, rout a ¼" round-over with a shoulder along one edge, see Fig. 1a. Adjust the bit so a ⅛" shoulder is left on the bottom edge of the blank to form the base of the music box.

SHADOW LINE. After routing the round-over, the next step is to rout a "shadow line" around the *top outside* edge of the blank, see Fig. 1b. To do this, I used a ½" straight bit, and adjusted the bit to stick up ⅛" above the router table. Once the height is set, adjust the fence so the bit routs a 3/16"-wide rabbet on the outside face of the blank.

INNER LIP. The next step is to rout a lip, on the *top inside* edge, for the Plexiglas dust cover to sit on, see Fig 1c. Since this lip is the same depth as the shadow line, the height of the router bit doesn't have to be changed. Simply move the fence over to make a ¼"-wide rabbet.

BOTTOM GROOVE. The last step is to cut a ⅛"-wide groove for the bottom of the music box to fit into, see Fig. 1d. To cut this groove, raise the table saw blade to make a ¼"-deep cut. Then position the fence ¾" from the outside of the blade. With the inside of the blank face down, place the base edge of the blank against the fence and cut the groove.

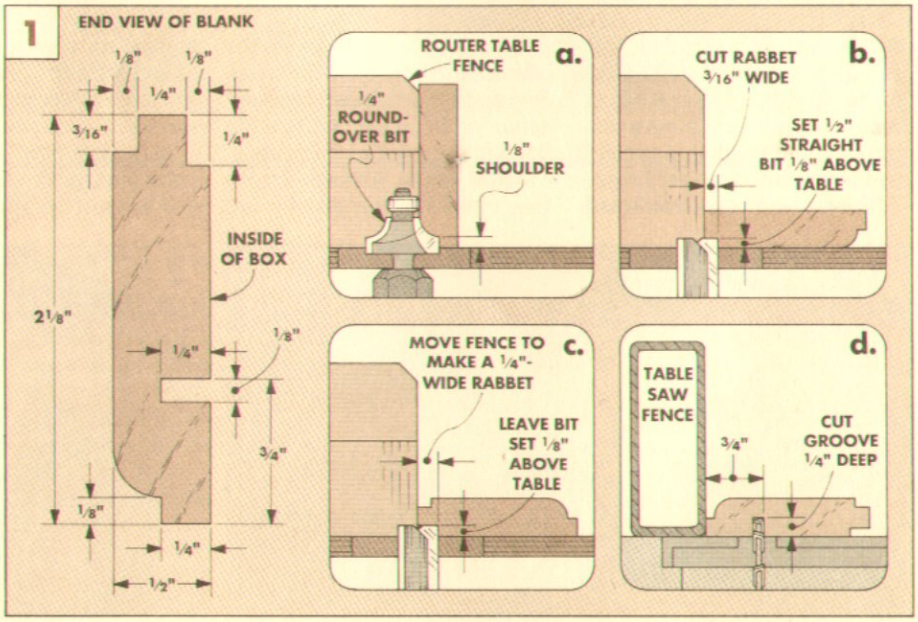

FRONT, BACK, & SIDES

After all the cuts are made on the long blank, the next step is to cut the front/back pieces (A) and side pieces (B) to their finished lengths. But there are two problems here.

First, you have to support and guide these small pieces while mitering the ends to length. Second, each pair of pieces has to be *exactly* the same length.

AUXILIARY FENCE. The solution to both problems is to attach an auxiliary fence to the miter gauge. This fence supports the small pieces. And, by using a stop block, you can cut each pair of pieces to exactly the same length, refer to Fig. 3.

ROUGH LENGTHS. Before mitering the pieces, cut the two **front/back pieces (A)** to a *rough length* of 6", see Fig. 2. And the two **side pieces (B)** to a rough length of 5".

TRIM TO SIZE. Once the pieces are cut to their rough lengths, tilt the table saw blade to 45° and trim off *one end* of all four pieces. (As you make these cuts, you will also cut a kerf in the fence that's used for the next cut.)

To cut the pieces to final length, measure from the long-point of the mitered end and mark the length, see Fig. 2. Then adjust the position of the stop block by laying the piece against the fence until the mark aligns with the edge of the kerf in the fence, see Fig. 3a. Then miter the pieces to length.

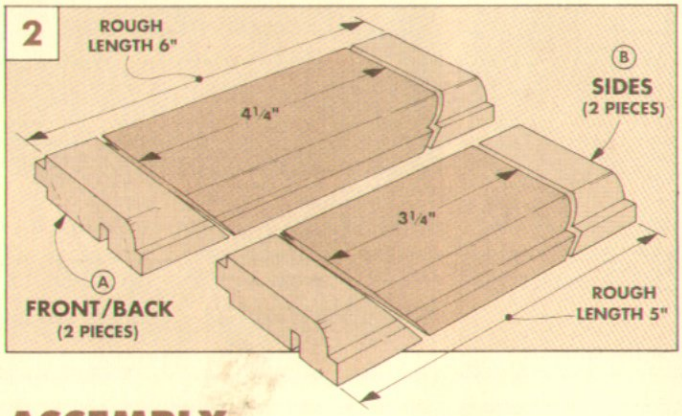

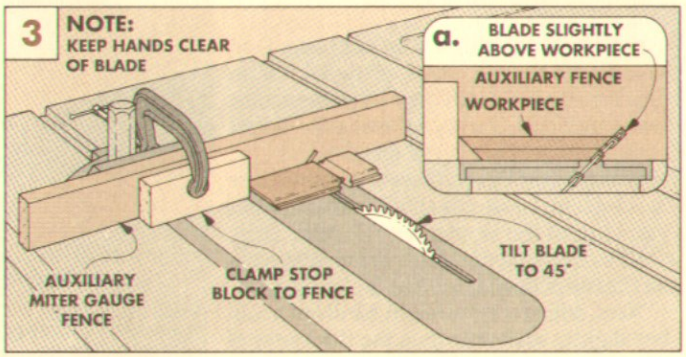

ASSEMBLY

Once the front/back, and side pieces are mitered to length, the next step is to make the bottom of the music box.

BOTTOM. The **bottom (C)** is a piece of solid wood that's resawn and planed down to fit the ⅛"-wide grooves in the sides of the box. To determine the length and width of the bottom, dry assemble the box, holding it together with a rubber band.

Now, measure the inside dimensions of the box, and add the depth of the grooves on all four sides. To provide extra clearance during assembly, subtract 1/16" from the length and width and cut the bottom to size.

KEYWIND HOLE. Before assembly, holes have to be drilled in the bottom and one of the sides to accommodate the music works. To make the alignment of the pin and the movement as simple as possible, start by drilling an oversize hole (½" diameter) in the bottom (C) for the keywind stem to pass through, see Fig. 4.

SHUT-OFF PIN. The music movement has a wire shut-off arm that moves to start or stop the music. On the music box this arm is activated with a shut-off pin that acts as a switch when the lid is opened or closed.

To mount this pin, drill a ⅛"-dia. hole in one of the side pieces (B). This hole is located ¾" from the long point of the miter and centered on the top edge of the side piece (B), see Fig. 5. To allow room to connect the pin to the wire arm, drill out a recess on the inside face of the side piece with a Forstner bit, see Fig. 5.

MOUNTING HOLES. Now, dry assemble the box again, putting the pin in place and attaching it to the wire arm. Then, center the movement in the box and mark the location of the two mounting holes, see Fig. 4. Disassemble the box and drill ⅛" mounting holes.

GLUE-UP. Finally, apply glue to the mitered ends and reassemble the box with the bottom (C) in place, see Fig. 6. (Make sure that the pin and arm are connected.)

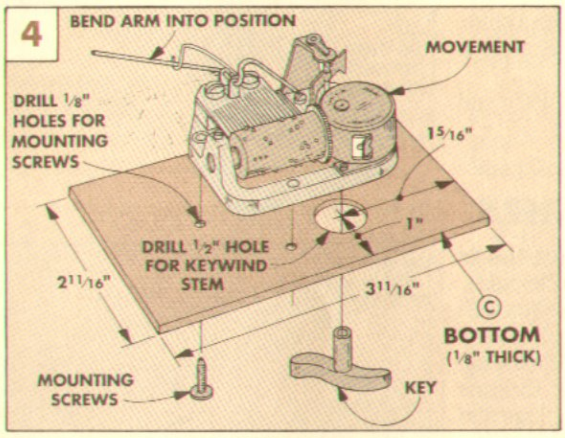

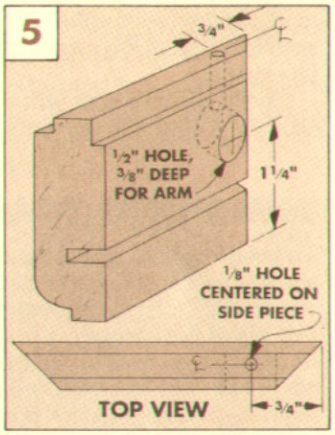

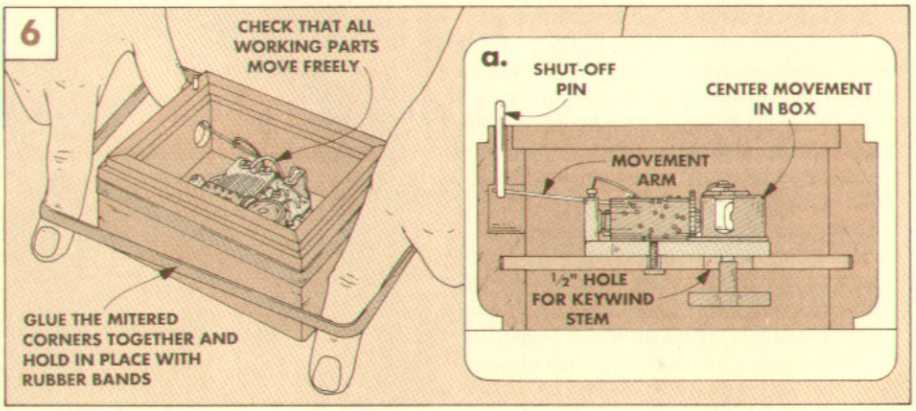

THE LID

Next, I began work on the ½"-thick lid. The **lid (D)** is cut to the same dimensions as the outside dimensions of the box (3¼" wide and 4¼" long), see Fig. 7.

I decided to dress-up the top of the music box with burl veneer and an inlay strip. (Another option is the carved lid shown on the opposite page.)

VENEER. The first step is to glue the burl veneer to the top of the lid (D), see Fig. 7. For a quick way to apply veneers, see Shop Notes on page 17.

ROUND OVER EDGES. The next step is to round over the top edges of the lid. To do this, I used a ¼" round-over bit on the router table, see Fig. 8. Start by adjusting the height of the bit to produce a 1/16" shoulder.

RABBET FOR INLAY. Once the round-over is complete, I routed a small rabbet around the edge of the veneer for the inlay strip. Start by marking the width of the inlay strip on the top of the lid, see Fig. 9.

Next, adjust a ½" straight bit to cut a rabbet slightly shallower than the thickness of the inlay, see Fig. 10. (The strip will be sanded flush later.) Now, adjust the fence so the bit cuts just up to the width mark.

FIT INLAY STRIPS. After the rabbets are cut on all four edges, I mitered the ends of the inlay strips with a chisel. To guide the chisel at 45° I made a jig, see Fig. 11.

To install the inlay, miter one end. Then temporarily tape this piece in place. Next mark the short point of the miter with a knife, see Fig. 12. Align this mark in the jig and cut it to length.

Finally, glue the inlay strips in place and sand them flush with the veneer.

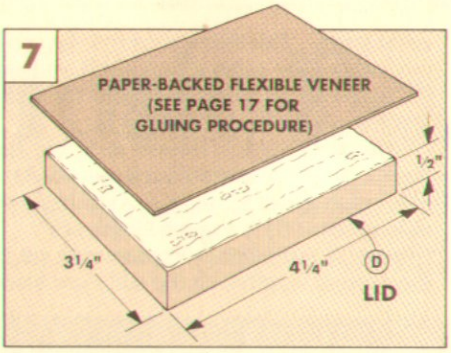

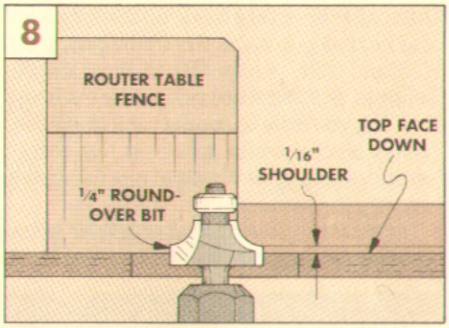

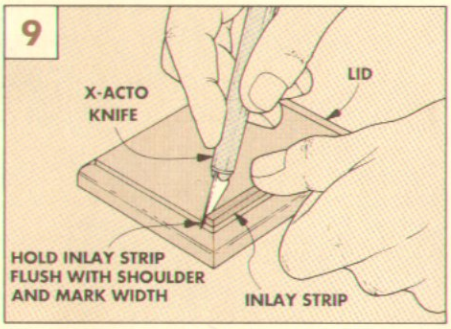

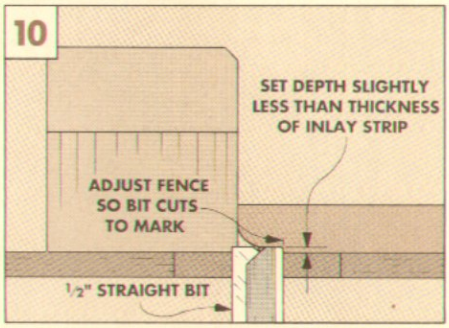

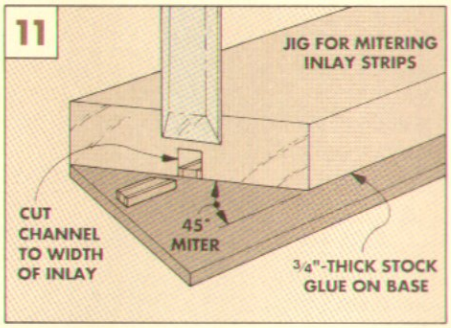

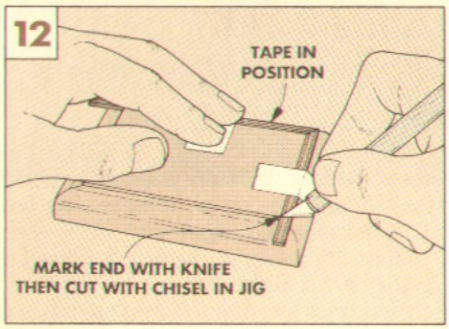

FINISHING TOUCHES

To complete the music box, attach the lid and drop in a dust shield made of Plexiglas.

HINGES. The lid is attached to the box with two small butt hinges. To mount these hinges, I chiseled out two mortises in the top edge of the back piece (A), see Fig. 13. Each mortise is the same length as the hinge and as deep as the hinge knuckle, see Fig. 13a.

Next, position the hinge flush with the *inside* edge of the mortise, see Fig. 13a. Mark the hole locations, drill pilot holes with an 18 gauge brad, and screw the hinges in place.

To locate the pilot holes in the lid, fold the hinge closed and stick a piece of double-sided carpet tape on each hinge, see Fig. 13. Then press the lid down on top of the hinges.

Now open the lid, mark the screw hole locations, and drill the pilot holes.

FINISH AND DUST COVER. Next, I removed the works and hinges and sprayed on two coats of aerosol Deft Clear Wood Finish.

Finally, cut a ⅛"-thick dust cover from Plexiglas to rest on the inner lip.

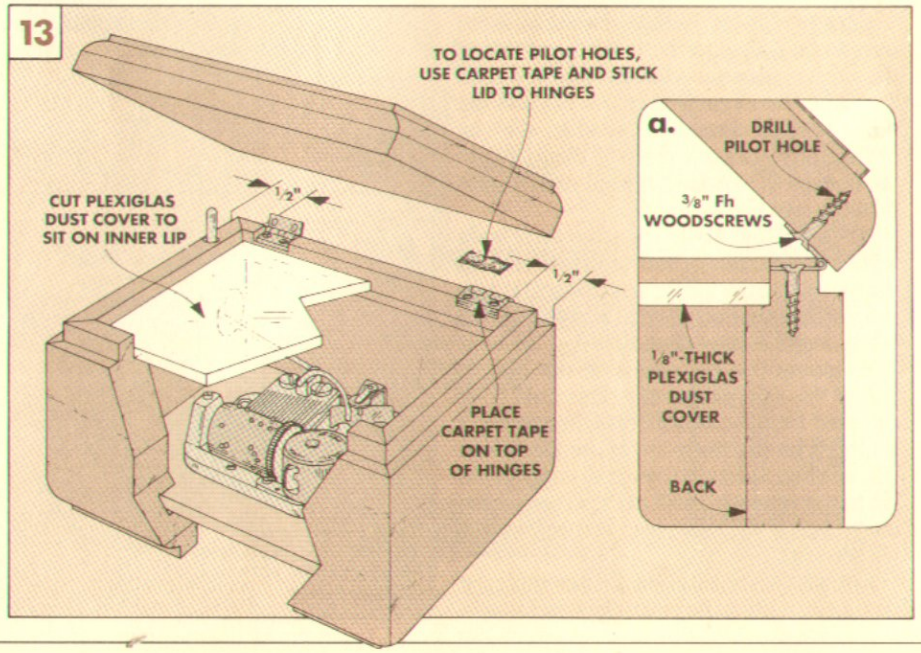

Carved Lid

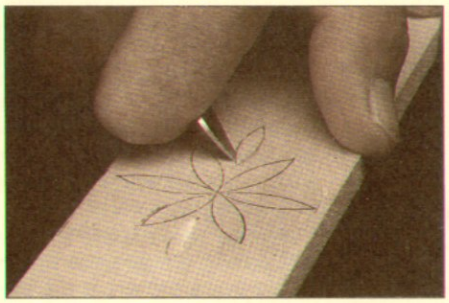

1 *Holding the knife at a steep (65°) angle, plunge the tip of the knife into the workpiece . Then using your thumb as a pivot, pull the knife along the outline.*

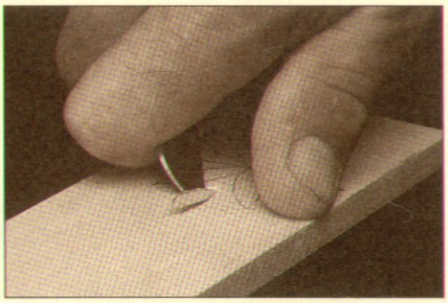

2 *The second cut will remove the chip. To make this cut, spin the workpiece around. Hold the knife at the same angle as before and pull the knife toward you.*

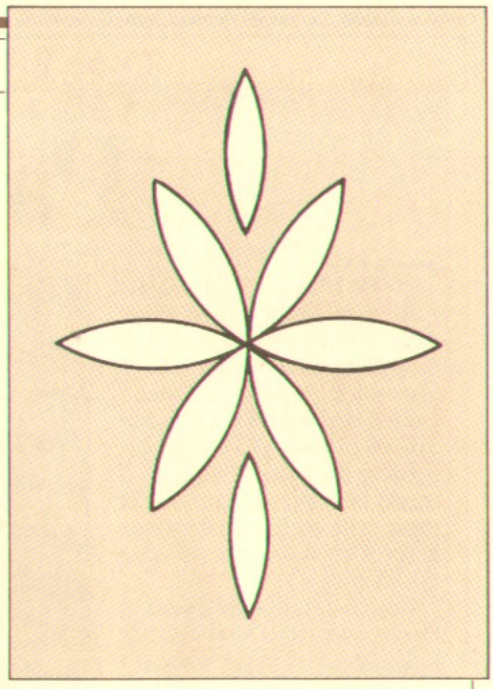

RECESSED LID

I had just completed the veneered lid on the music box, when someone suggested doing a chip-carved lid. I thought I'd give it a try.

I'm not an expert chip carver, so I decided to stick to a very simple design. (To transfer the full size pattern above, see Shop Notes on page 16.)

Because it took me several attempts to get the carving just right, I made the lid to accept a drop-in carved panel. This way I could carve the design several times on a long strip of wood, then cut out the one that I thought looked the best and fit it in the lid recess.

MATERIAL. I carved the design shown above in a ¼"-thick strip of basswood. Basswood is a soft, almost grainless wood that carves easily.

GAUGE. Before I actually started work on the lid, I made a gauge for laying out the outline of the recess, see Fig. 1 below. Later I used this gauge as a support for a chisel to clean up the edges of the routed recess, refer to Fig. 4.

LAYOUT. Once you've finished making the gauge, use it to lay out the recess on the top of the ½"-thick lid, see Fig. 2.

ROUTING. With the layout complete, the next step is to rout a ¼"-deep recess to accept the carving, see Fig. 3. To do this, use a ¼" straight bit and rout *close* to the line.

CHISEL SUPPORT. Now, to get a crisp shoulder around the recess, I used a chisel to cut to the layout line. Here again I used the layout gauge, but this time as a support for the chisel, see Fig. 4. To get the insert to fit tightly, angle the chisel to undercut the sides of the recess slightly, see Fig. 4a.

ROUNDOVER. Once you've finished chiseling the recess to the line, rout a ¼" roundover with a 1/16" shoulder around the four edges of the lid, see Fig. 5a.

All that's left is to cut the carved panel to fit the recess. Then apply a small amount of glue to the bottom of the panel and press it into place, see Fig. 5.

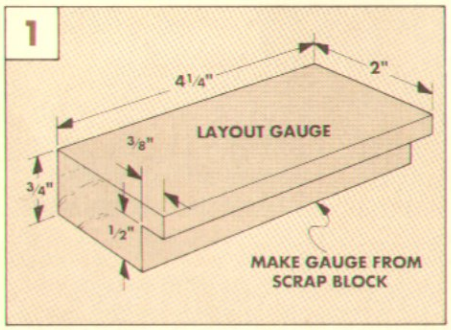

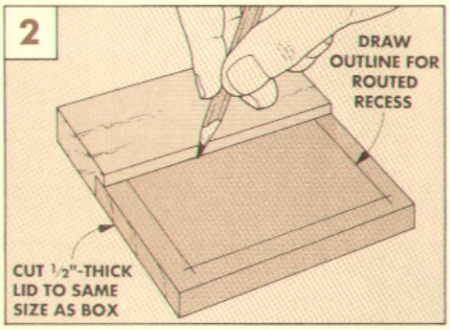

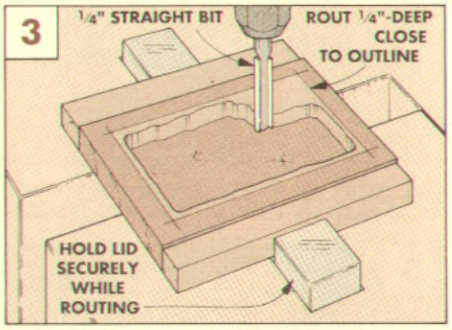

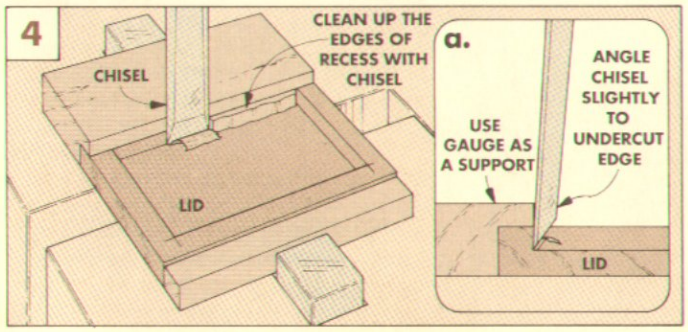

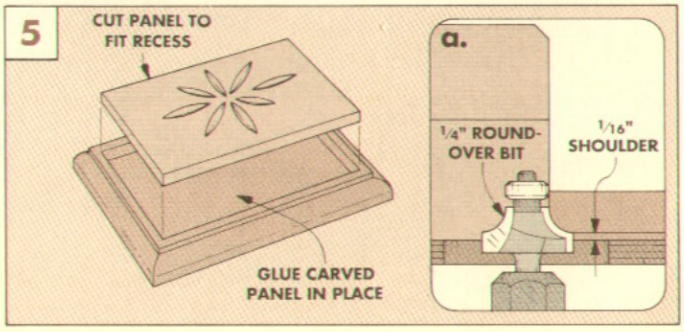

Paper Gripper

The idea for this project came from a local diner. After I ordered, the waitress slipped my order under a holding device for the chef. When I looked at the device I was surprised to find glass marbles holding the paper. I thought it would be handy to have one of these grippers to hold drawings in the shop or the grocery list in the kitchen.

The challenge was designing the gripper so it would easily hold a piece of paper when it's slipped into place, but not so firmly that the paper rips when pulled out. After some trial and error, I was able to make it work by drilling a shallow pocket behind each marble.

MARBLE HOLDER

I began building the gripper by cutting a **marble holder (A)** from ¾"-thick stock to a width of 1½" and length of 11½", see Fig. 1. (It could be longer or shorter, but this length will hold a 8½" x 11" piece of paper.)

DRILL HOLES. The marbles are held in ¾"-diameter holes set at an angle to the back plate. It's easiest to drill a series of *straight* holes, and then rip the workpiece at an angle. Start by drilling ten 9/16"-deep holes down the length of the workpiece, see Fig. 1.

RIP TO WIDTH. Next, rip the workpiece (with the holes down) at a 20° angle so the distance from the edge of the board to the long point of the angle is 1", see Fig. 2a.

RABBET FOR PAPER. To provide an area for the paper to slip into, I cut a rabbet along the angled edge, see Fig. 3. To do this, leave the blade at 20° and lower it to ⅜" above the table, see Fig. 3a. Then move the fence towards the saw blade the thickness of the blade.

BACK PLATE

After rabbetting the marble holder, I made a **back plate (B)**, see Fig. 4. It's cut from a piece of ⅜" stock, 2½" wide and 13½" long.

Then, to keep the marbles from gripping the paper too tightly, drill a series of shallow ¾" holes in the back plate, see Fig. 4.

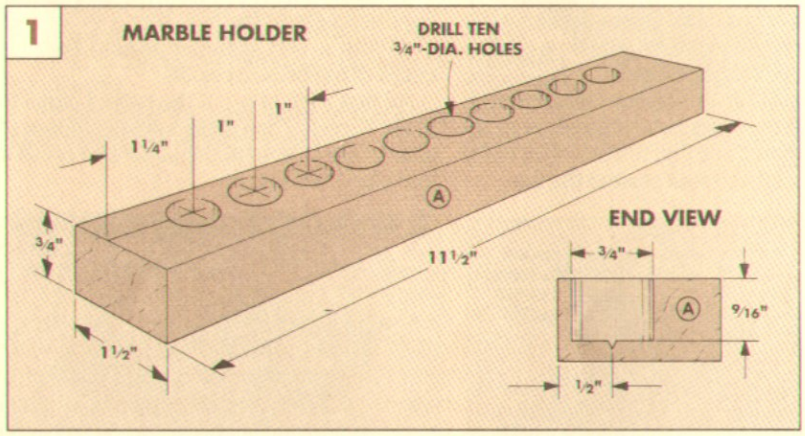

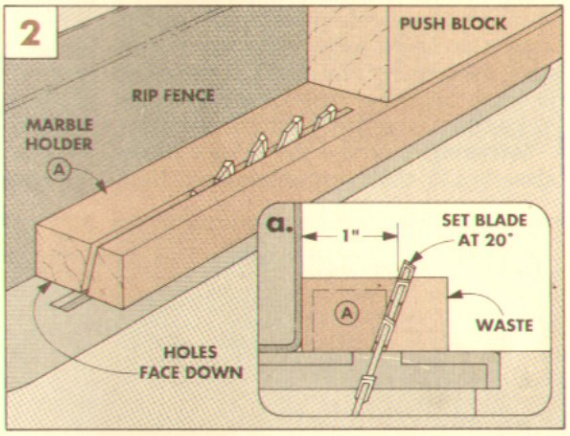

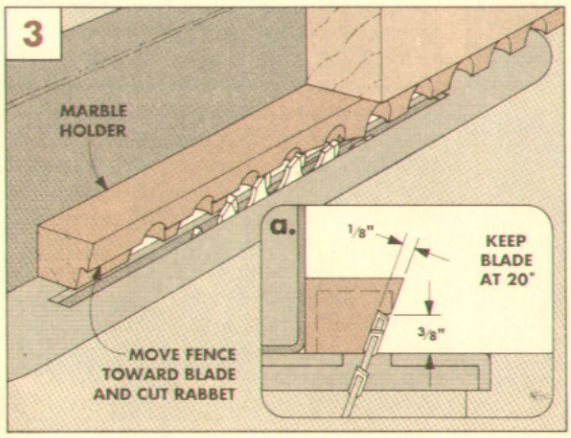

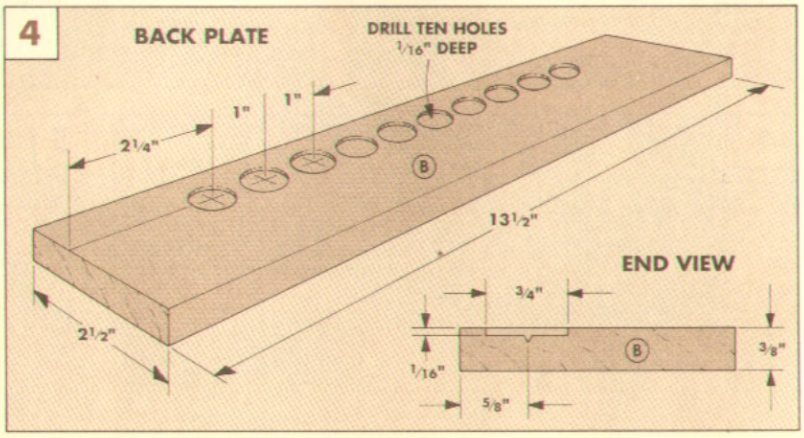

HANGING THE GRIPPER

You can hang the gripper on the wall by driving screws through the back plate. But I used a system that hides the screws.

This system involves cutting a dovetail groove in the back of the back plate and screwing a matching dovetail-shaped bar to the wall. Then the gripper slides over the bar, refer to Fig. 11.

DOVETAIL GROOVE. To rout the 3/4"-wide groove in the back of the back plate (B), start by positioning the router table fence so a 1/2" dovetail bit is centered on the width of the workpiece, see Fig. 5.

Now make a series of passes turning the workpiece end-for-end between passes. Move the fence *back* slightly between every other pass, sneaking up on the final width.

HANGING BAR. After the groove is cut, the next step is to cut a **hanging bar (C)**. Though the bar needs to be 3/16" thick to match the groove, I found it safer to start with a piece that was 3/4" thick and 15" long. Later I resawed it to thickness.

Without changing the height of the dovetail bit, move the fence to cover most of the bit. Then, make a narrow pass along each edge of the stock, see Fig. 6.

Check the fit of the bar in the groove. If it's a little wide, move the fence back slightly and make another pass until the bar just slides into the groove.

Once the bar fits the groove, it can be resawn to final thickness, see Fig. 7. To hold the back plate slightly away from the wall, cut the bar a hair thicker than the depth of the groove in the back plate. (You may have to snap off a sliver of wood on each edge.)

BEVEL EDGES. Now slide the bar into the groove in the back plate and trim all four edges of both the bar and the back plate at a 20° angle, see Fig. 8.

ASSEMBLY

Finally, assembly can begin. I started by finding some marbles at a local toy store that were fairly consistent in diameter.

MARBLES. For the gripper to work properly, all the marbles should be close to 5/8" diameter. To check for consistency, make a gauge by drilling a 5/8"-diameter hole through a piece of scrap, see Fig. 9. Once I found ten marbles that dropped snugly through the gauge, I placed one marble in each hole of the holder (A) and temporarily taped them in place, see Fig. 10.

ASSEMBLE PARTS. Now, glue the top edge of the holder (A) to the back plate (B) so it's centered on the length and flush with the top bevel, see Fig. 11.

FINISH AND MOUNTING. After assembling the parts, I applied tung oil to the wood and then mounted the hanging bar (C) to the wall with countersunk screws. Finally, slide the back plate over the bar, and slip your *Woodsmith* renewal notice into the gripper.

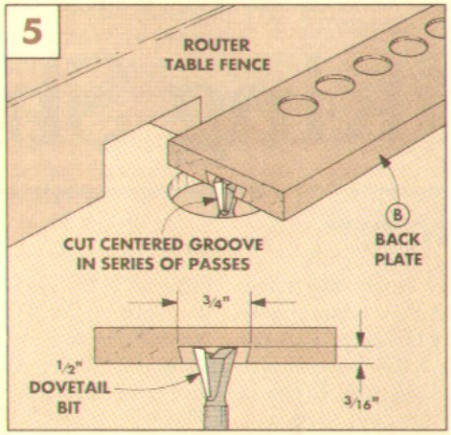

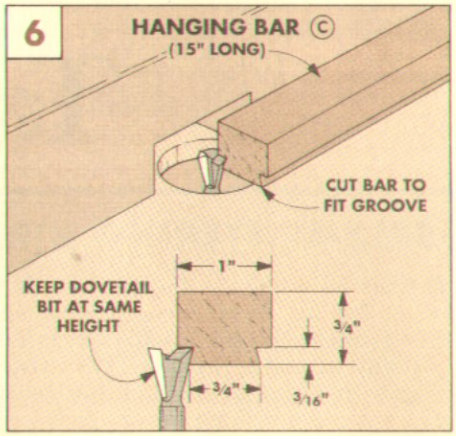

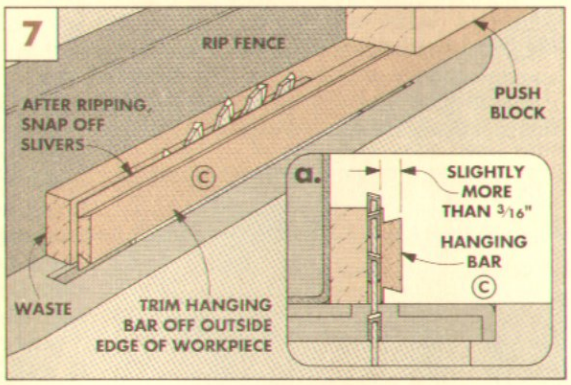

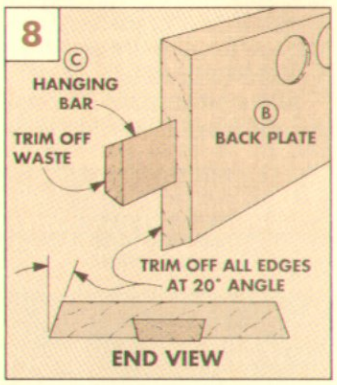

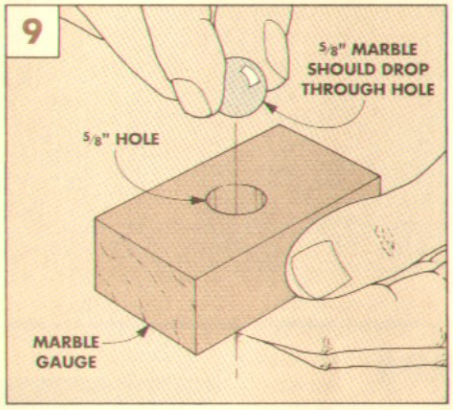

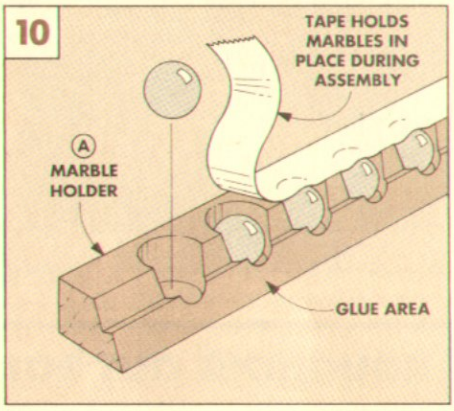

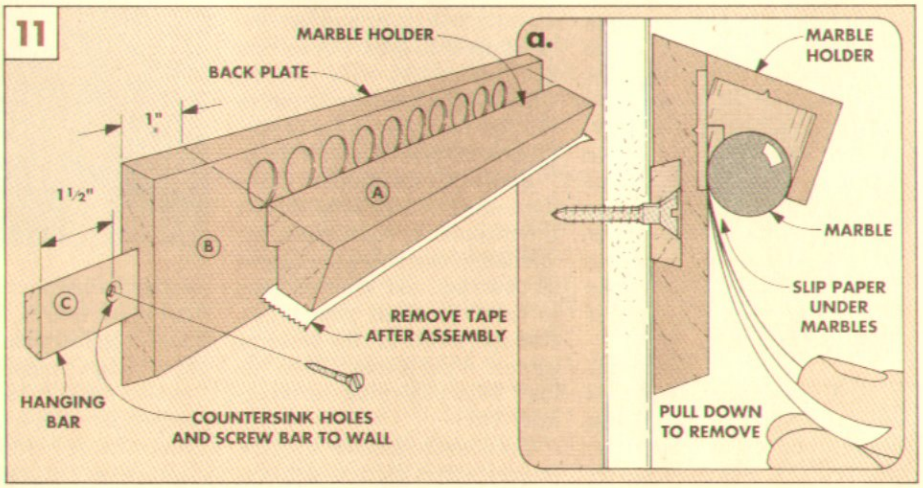

Talking Shop

SELF-CENTERING HINGE BIT

■ When mounting the hinges on the Toy Box, shown on page 6, I was faced with drilling multiple pilot holes for the piano hinges. No matter how careful you are when drilling these holes, the drill bit can move off center. If the pilot hole is off-center, the hinge will move when the screw is installed.

HINGE MOVEMENT. The reason the hinge moves has to do with the way hinges are made. Most hinges have countersunk screw holes to accept flathead screws. As these screws are tightened down, the hinge is pulled out of position, see Fig. 1.

So, what's the best way to drill perfectly centered holes for hinges, or any hardware that has countersunk screw holes?

HINGE BITS. The solution to this problem is a unique self-centering drill bit. This bit is known by many names: Vix bit, spring-action hinge bit or self-centering hinge bit. There are two common sizes available. One drills pilot holes for No. 5 and 6 screws and the other drills pilot holes for No. 8, 9, and 10 screws. (See Sources on page 31.)

CONSTRUCTION. The bit consists of three main parts, see Fig. 2. An outer case that's chucked into a drill. A high-speed twist drill bit that's held in the outer case with a set screw. And a spring-loaded retractable inner sleeve.

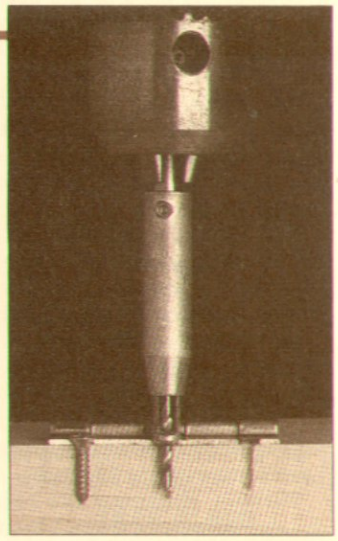

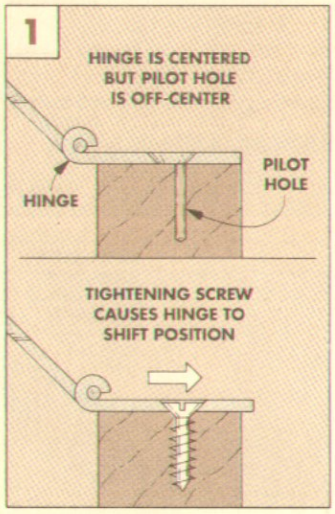

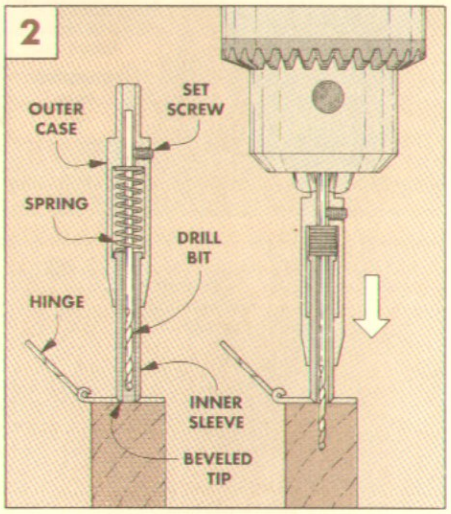

HOW TO. The key to making this bit work is the tip of the inner sleeve — it's ground to the same bevel as the countersunk holes in the hinges. To drill a hole, start by holding the hinge firmly in place. Then, as you insert the bit into the hinge mounting holes, the beveled tip centers the twist bit perfectly. When you push down on the bit, the inner sleeve retracts into the outer case as the drill bit enters the wood.

DEPTH SETTING. The other thing I like about these bits is how easily you can set the depth of the bit. Simply loosen the Allen head set screw on the outer case, and position the bit to the correct depth, see Fig. 2. Then, retighten the set screw and drill the pilot holes.

ROUGHING OUT BOARDS

■ *I recently stopped at a local lumber yard to pick up some hardwood for a project. I was armed with a cutting diagram and materials list in one hand and a tape measure in the other.*

Since hardwood lumber is not cut in uniform widths and lengths, it was evident that the "ideal" boards shown on the cutting diagram weren't readily available. What tricks do you use when buying and laying out boards?

Joe Perzel
Minneapolis, Minnesota

I usually start by selecting enough boards to match the specified total board footage required for the project. Then add 15% to 20% for defects and irregular-shaped boards (those that are tapered or with uneven edges). If I'm dealing with pieces that have a unique shape or size, I'll look for boards just for them.

PROJECT FAMILIARITY. Once the lumber is in the shop, there's a temptation to start cutting immediately. But now's the time to sit down and take a few minutes to carefully study your plans. And ask, where are the problem pieces? What pieces will be visible? What pieces have to be exactly flat?

Once you're familiar with the project pieces, the next step is to figure out what pieces will be cut from which boards. At this point it's like a jigsaw puzzle and there are two ways to approach it.

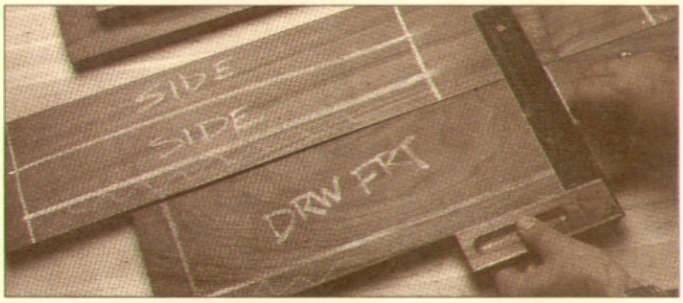

SCALE DRAWINGS. The first method is to use a scale drawing. Simply sketch a reduced outline of each board on graph paper. (If any of the boards have checked ends, cut off any defects before sketching the outline.)

Next, use the materials list to start sketching where the project parts might fit onto the board. Since most material lists give finished dimensions for

parts, add space for the saw kerfs and any jointing or planing.

If the project has many parts, you might want to make a reduced scale template for each piece (like the kitchen or bathroom design kits that are sold). You can easily move the parts around to find what pieces fit best on which boards.

Scale drawings do have one limitation though, the boards are assumed to be perfect — no knots, taper, or wild grain.

LAY OUT ON BOARDS. That's why I like the second method, laying out the pieces directly on the boards with chalk. If the parts don't fit, I can wipe the marks off with a damp sponge and try again.

Before marking any boards, sort through them and keep an eye out for pieces with pleasing grain patterns. Use these for the highly visible parts of the project (such as table tops and drawer fronts). The boards with slight defects can be used for parts that won't be seen (interior parts, drawer backs and bottoms).

DON'T FORGET KERFS. When laying out, mark the pieces ¼" wider and ½" longer than needed to allow for kerfs, jointing, and squaring up.

I usually fill in the large pieces first so that the cutoffs can be used for smaller parts. I also try to align cross-cut lines in each board to make rough cuts more manageable.

AN EXAMPLE. Recently I was working on a project that required the following pieces: (A) 4" x 14" (2 ea.), (B) 1¾" x 6¾" (4 ea.), and (C) 1¾" x 16" (3 ea.). I was faced with finding the best way to get the pieces from a 6"-wide board that was 4 feet long, see Fig. 1.

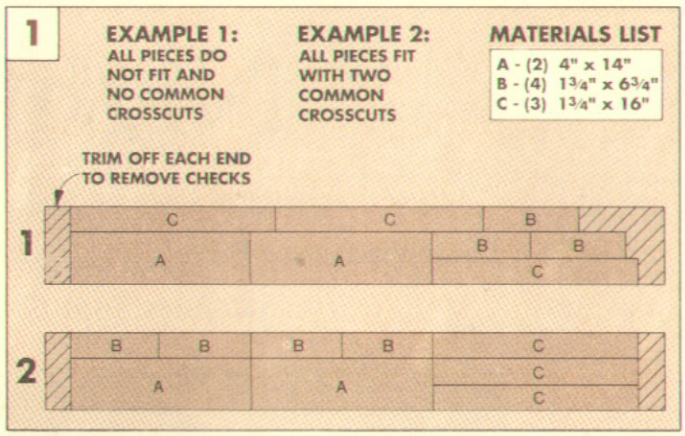

The first time I laid it out, I couldn't fit all the pieces on the board. Not only that, there weren't any clear cross-cuts.

So I wiped off the chalk and tried again. This time all the pieces fit, and I could start by cross-cutting the board into three manageable pieces. Then it was easy to rip all the parts from these three short pieces.

LATHE SANDING

■ *I never seem to be able to get my turning projects as smooth as I'd like. Is there a trick to sanding on a lathe?*

C.L. Ketterer
Zelienople, Pennsylvania

The real trick in sanding on the lathe is to get the lathe and the sandpaper to work together — not against each other. This can be done by choosing the right sandpaper and then using correct sanding techniques. (Note: Remember, no amount of sanding will make up for a roughly turned piece.)

SANDPAPER. Before you sand a project, the first step is to choose the correct type and grit sandpaper. I use aluminum oxide sandpaper because it stays sharper longer and doesn't break down from heat as quickly as the other types.

I generally use a progressive series of four grits of paper: 120, 150, 180, and 220. This works well for most projects and will produce a smooth finish. An exception to this is on end grain. Here, I'll often start with 80 or 100 grit and go on to finer grits.

Many turners use cloth-back paper or put Contact paper on the back of sandpaper. But folding these thick papers doesn't leave the crisp edges that you get with ordinary sandpaper. And it's easier to sand sharp details if the folded edges of the paper are crisp.

I do however, use Stikit sandpaper quite a bit. I fold it back-to-back so the grit on one side keeps the sandpaper from slipping off my fingers while the other side sands the workpiece.

TECHNIQUES. Once the sandpaper has been selected, the next thing to consider is technique. Start by removing the tool rest so that you don't get your fingers pinched between the workpiece and the tool rest.

Next, make sure you're sanding in the right direction. You should sand with your hand *under* the workpiece — with your fingers following the direction of the workpiece rotation. If you sand on top of the piece, the wood can grab the sandpaper (and your fingers) and can crunch your knuckles against the spinning wood.

Shop Note: If you own a lathe that has a reversable motor, make sure your fingers always follow the direction of the workpiece rotation. Reversing a lathe and sanding in both directions bends the wood fibers and allows them to be removed more easily. This can produce a very smooth surface.

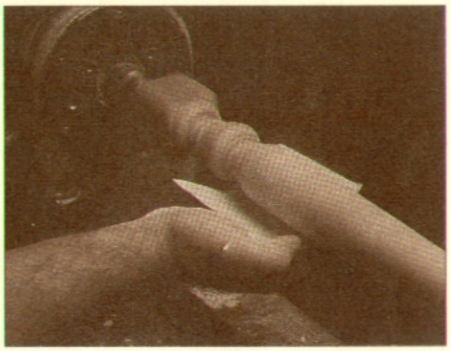

LATHE SPEED. With sandpaper in hand, you're ready to select the lathe speed. The speed that I use for most sanding is the same that I've used to make my finish cuts. However, there are a few exceptions to this where I'll change the speed of the lathe.

I'll slow down the lathe when I'm sanding faceplate work, such as plates and bowls. The rims and edges of this type of work can burn very easily. Although the rim revolves at the same revolutions per minute as the center of the work, the rim has a greater velocity and a larger diameter. This means there will be more wood in contact with the sandpaper in the same amount of time.

Another time to decrease speed is when sanding work with small beads or sharp crisp edges. By slowing down you'll be able to control how rapidly the wood is removed. It'll take longer to sand at this speed, but there's less of a chance of removing a fine detail that you spent considerable time forming.

PRESSURE. Now that the lathe speed is set and you're ready to sand, one question remains. How much pressure should be applied when sanding? The best indicator I know for correct sanding pressure is heat.

If your fingers start heating up, you need to back off the pressure. Excessive pressure creates friction and the heat produced can burn both the sandpaper and the wood.

BURNISHING. Once the sanding job is done, there's one more step I like to do before finishing. I turn on the lathe and burnish the turned piece with its own shavings. Burnishing compacts wood fibers to produce a smooth surface. So I take a generous handful of shavings and press them firmly into the piece. This produces a soft, smooth sheen.

Night Light

You can create magic with a scroll saw and a Christmas tree bulb. And it's magic that can change from season to season with four interchangeable patterns.

You don't often think about projects that get their charm from the wood that's *missing*. This night light is one of those projects. It's a box, with solid wood sides, top, and bottom. What makes it interesting is the front panel that screens the light shining from a small bulb inside.

We designed this night light with four of these interchangeable scroll-sawn panels. You can slide one in front of the light, and store the others in a compartment in the back of the box.

WOOD. I used cherry for all the parts of the night light. The color and warmth of cherry enhance the glow cast by the light. And because cherry is close-grained, it cuts well on a scroll saw.

SUPPLIES. The light fixture is a Christmas tree-size (4 watt) bulb that clips tightly into the base of the box. This light bulb fixture, along with a full-size drawing of each of the four patterns (and a piece of felt cloth for the bottom) is available from *Woodsmith Project Supplies*, see Sources, page 31.

EXPLODED VIEW

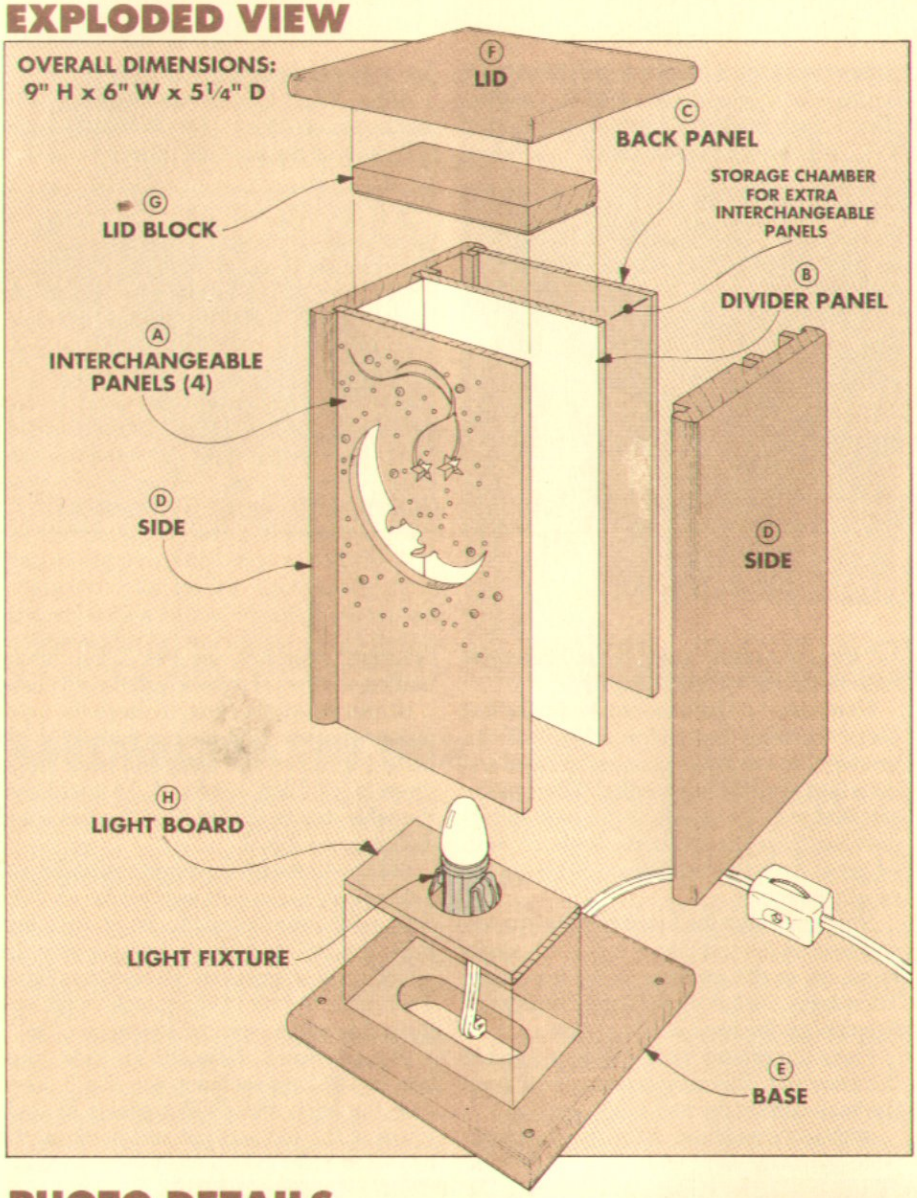

LIGHT DETAIL

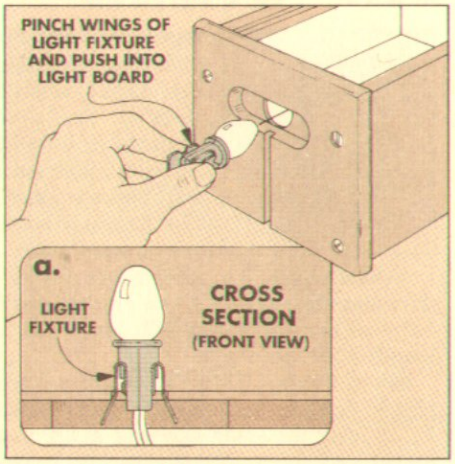

MATERIALS

A Interchangeable Panels (4)	¼ x 4¾ x 8
B Divider Panel (1)	¼ x 4¾ x 8
C Back Panel (1)	¼ x 4¾ x 8
D Sides (2)	¾ x 4¾ x 8
E Base (1)	½ x 5¼ x 6
F Lid (1)	½ x 5¼ x 6
G Lid Block (1)	¾ x 2 x 4
H Light Board (1)	⅛ x 2 x 4

SUPPLIES

- (4) No. 6 x 1" Fh woodscrews
- Tung oil finish
- Felt cloth 6" x 6" (rough)
- Night Light Kit (see page 31)

CUTTING DIAGRAM

¾" x 5½" - 32" (Two Boards @ 1.2 Bd. Ft. Each.)

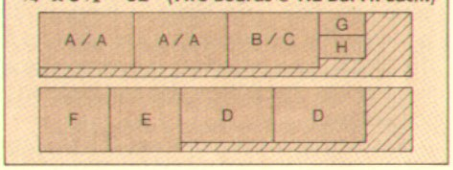

PHOTO DETAILS

RESAWN PANELS

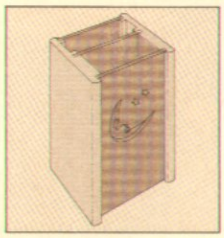

I started building the night light by cutting six panel blanks (four for the interchangeable panels, plus one divider panel and one back panel). The night light box is built around these.

PANEL BLANK. To make these six ¼"-thick **panels (A,B & C)**, first cut a piece of ¾" stock to a final width of 4¾" and a rough length of 26", see Fig. 1.

RESAW PANELS. Then resaw this into two panels that are each slightly thicker than ¼". I used the table saw and made two passes with a sharp blade, see Fig. 1. You could also use a band saw or thickness planer to reduce the stock to ¼". Now, sand or plane the saw marks from all the panels so they're each the same finished thickness of ¼". Then cross-cut both blanks to produce six 8"-long panels, see Fig. 2.

Shop Note: Instead of resawing solid stock, you could use plywood (but the plies will show on the finished pattern panels).

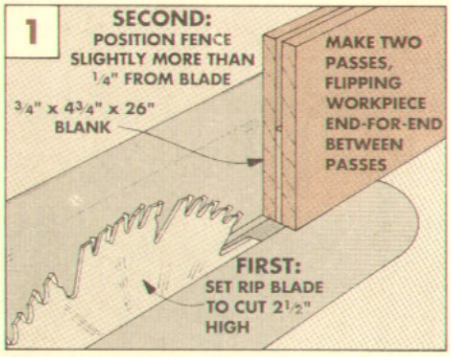

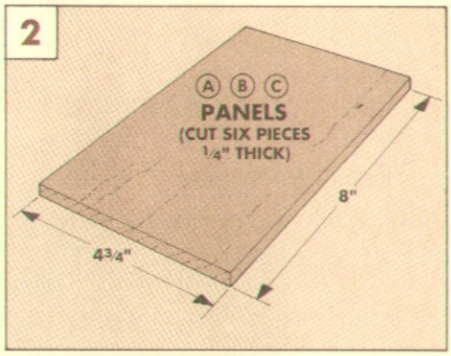

SIDES

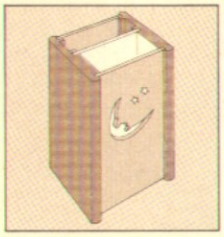

After resawing and cutting the panels to size, the next step is to make the grooved sides of the box.

SIDE BLANK. The two **sides (D)** start out as one blank of ¾"-thick stock. Cut the blank to a finished width of 4¾" and a rough length of 16½", see Fig. 3.

PANEL GROOVES. Next, cut three ¼"-wide grooves for the panels to slide into. I used the table saw with a rip blade to form all the grooves. But before cutting the grooves in the blank, cut a test piece the same size as the blank to check the width and position of the groove.

The first grooves to cut are the two outside ones, see Fig. 3. To do this, set the fence ¼" from the inside edge of the blade, and raise the blade ⅜" above the table.

Now make one pass to cut a kerf in the test piece forming the outside limit of the groove. Then turn the piece end-for-end and cut a kerf near the other edge. When you're satisfied with the depth of the kerf and its distance from the edge, cut kerfs on both edges of the actual workpiece following the same procedure.

Now reposition the fence and make a second pass on the test piece, so the ¼" panels fit snugly in the grooves in the test piece. Then make the cuts in the actual workpiece to complete the two outside grooves.

Form the groove for the divider panel in the same way. This groove is located 2" from the back edge of the box sides, see Fig. 3.

STORAGE CHAMBER. After the three ¼"-wide grooves were cut, I cut a 1"-wide "storage" chamber, see Fig. 3. Do this by making a series of passes with the rip blade.

OUTSIDE EDGES. Next, to make the sides appear thinner than their actual ¾" thickness, I trimmed the front and back edges down to ½" thick, see Fig. 4. To do this, set the table saw blade ½" from the fence and ⅜" high, see Fig. 5.

BULLNOSE PROFILE. After trimming the outside edges, rout a bullnose profile on them with a ⅜" round-over bit. To do this, first raise the bit ¼" high and round over the outside edges (grooved face *up*), see Fig. 6. Then raise the bit ½" high and round over the inside edges (groove *down*), see Fig. 7.

PRE-ASSEMBLY. Now cut the side piece into two 8"-long sections, see Fig. 3. Then glue the back and divider panels in place (flush at the top and bottom) between the two sides, refer to Exploded View, page 27.

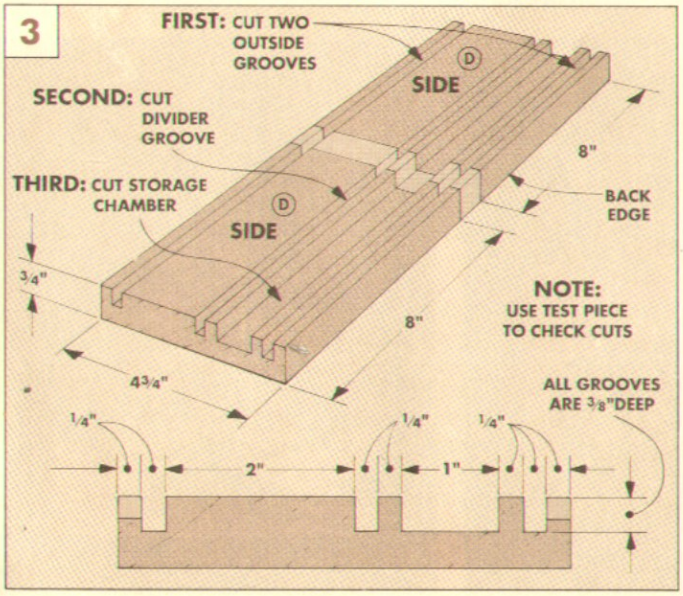

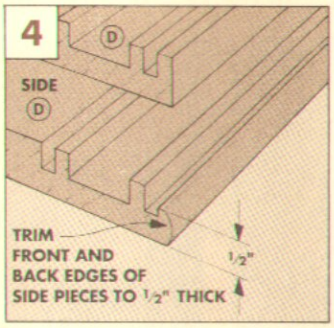

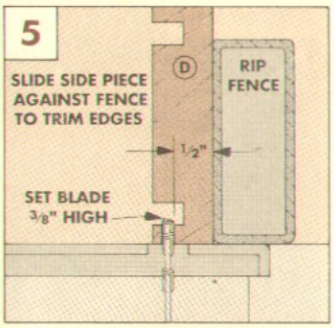

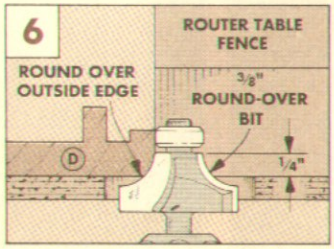

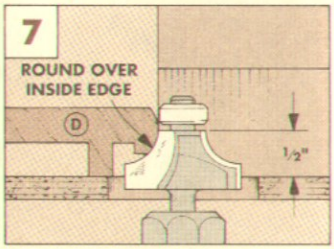

BASE & LID

Begin making the base and lid of the box by cutting a blank to a final width of 5¼", and a rough length of 12½". Resaw, then sand, the blank to a final thickness of ½". Now cut the blank into two pieces, each 6" long, to form a **base (E)** and a **lid (F).**

FINGER SLOT. A "finger slot" in the base allows access to the electrical fixture. To make this, bore two 1" holes in the base, then cut out the waste between them with a sabre saw, see Fig. 8a.

CORD GROOVE. Next, form a ¼"-deep groove for the electrical cord in the bottom of the base using the router table, see Fig. 9.

ROUND-OVER EDGES. After cutting this groove, soften all the edges of the top and bottom with a ⅜" round-over bit. To do this, raise the bit ¼" above the table, see Fig. 10.

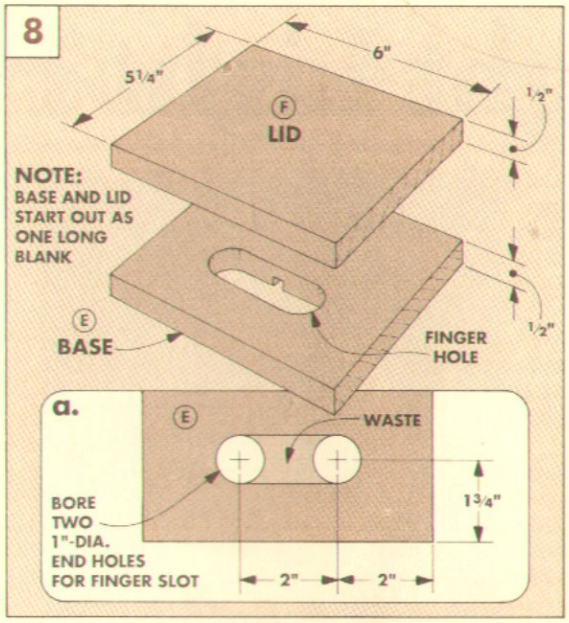

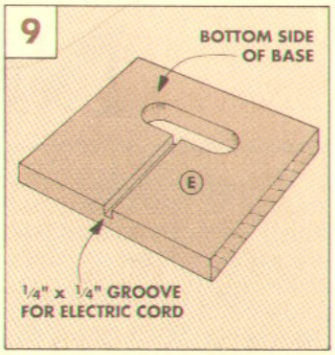

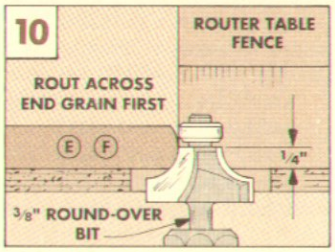

ASSEMBLING THE BOX

When the base and lid are complete, finish assembling the night light box. Do this by first drilling countersunk shank holes on the bottom side of the base, see Fig. 11a.

Next, center the base on the side assembly, and temporarily clamp them together. The sides should be inset an equal distance all around the base, see Fig. 11. (In my case, this was ¼".)

Now drill pilot holes through the shank holes into the bottom ends of each side piece, see Fig. 11a. Then glue and screw the base in place with #6 x 1" Fh woodscrews.

LID BLOCK. The lid fits snugly onto the top of the box by means of a lid block that's glued to the underside of the lid, see Fig. 12.

To make the **lid block (G)**, start by cutting a ¾" piece of stock to fit the opening of the light chamber (with a front panel in place).

With the lid block cut to size, rout a narrow chamfer along all four edges of one side of the block. (The chamfered edges let you remove and replace the lid more easily.)

Now, lay out the position of the lid block on the underside of the lid (see Fig. 12a), and glue the block in place.

LIGHT BOARD. The light fixture has a spring retainer that's designed to seat into a ⅛"-thick board with a 1" hole, see Fig. 13.

To make the **light board (H)**, first measure the opening at the bottom of the light chamber. Then cut a piece of ⅛" resawn stock to fit this opening, see Fig. 13a. Bore a 1" hole through the center of this piece, then glue the light board in place in the bottom of the base.

FINISH. I applied a tung oil finish to the box. Note: The box will reflect more light through the panels if you paint the three inside surfaces of the light chamber white.

Finally, glue a piece of felt on the bottom of the box to hold the electrical cord in place.

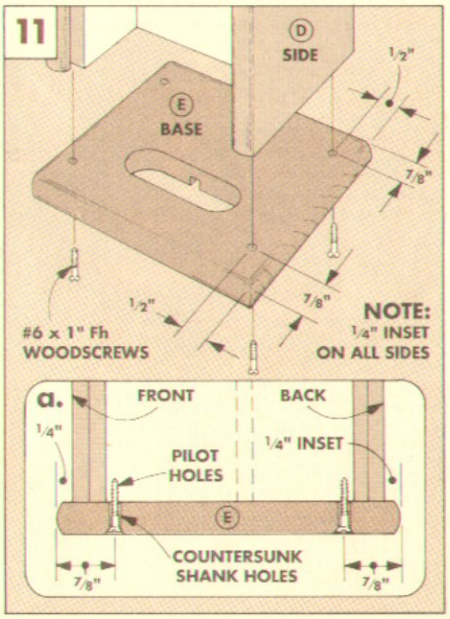

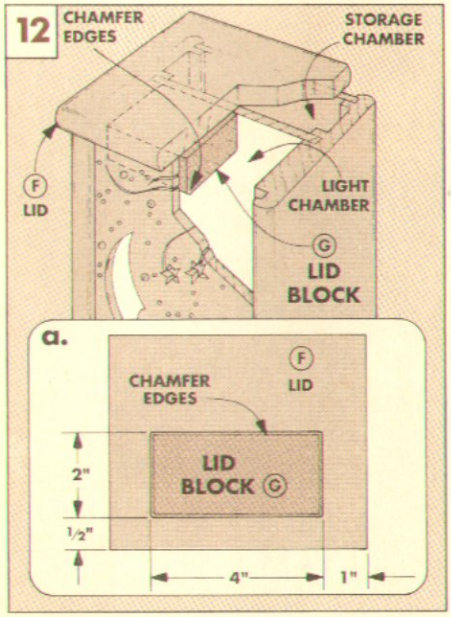

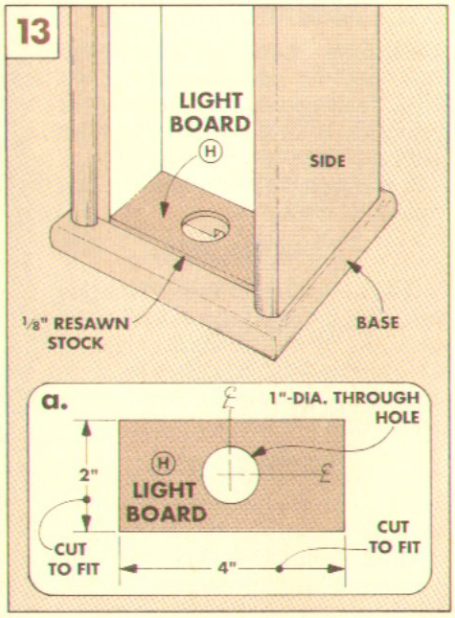

Night Light Panels

The magic of the night light is in the scroll-sawn panels. Here are some suggestions for making four interchangeable panels.

SCROLLING TIPS

The patterns shown here are half-size, so have them enlarged 200% at a copy shop, or send for the full-size patterns from *Woodsmith Project Supplies*, see Sources, page 31.

Note: The *lighter* areas of the drawings are those that should be cut away. (I used a No. 5 skip tooth blade in the scroll saw for each of the patterns.)

ATTACH PATTERN. First finish sand each of the panel blanks. Then glue a pattern to the blank using 3M's Spray Mount or a light coat of rubber cement.

DRILL HOLES. Before you begin to saw, drill starting holes for the pierce (inside) cuts, and for the other holes.

FINISH. Finish the panels by dipping them in a shallow pan of tung oil. Then poke out the excess finish from the drill holes with a wire brad. (A shot of compressed air works even better.)

FALLING STARS

Drill the holes for the background stars first (using 1/16" and 1/8" drill bits).

The points on the moon and the falling stars will be sharpest if you form them with two intersecting cuts, rather than by trying to pivot around them.

JACK O'LANTERN

Drill out the stars (with 1/16" and 3/32" bits) and the moon (with a 3/4" bit) first. Then cut out the details of the pumpkin. Pivot the blade only when cutting out the eyes and the mouth.

Cut around the fence parts next, and finally cut around the cat.

CAT FISHIN'

This pattern requires the most starting holes for the pierce cuts. Drill these first, then cut out the smaller areas.

Cut around the cat last. (This gives you more support when you're scrolling between the leaves).

SNOWY PINE

Drill holes for the snowflakes (1/16"bit) and the tree ornaments (3/32"). Then drill starting holes for the snow on the branches. Next cut the tree outline, and finally the snow on the ground.

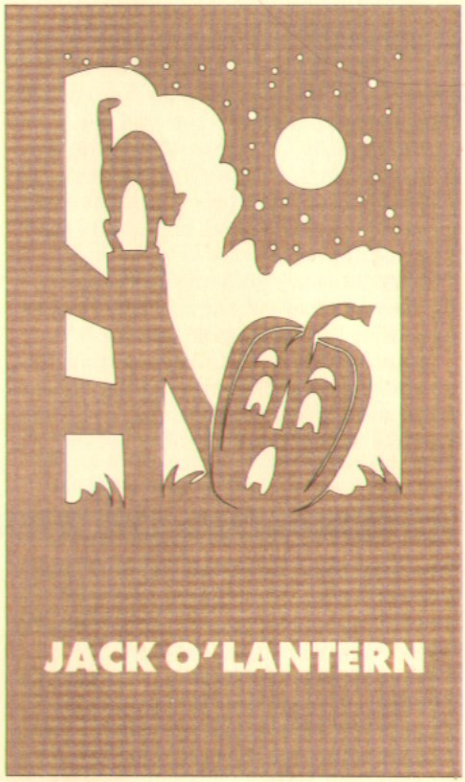

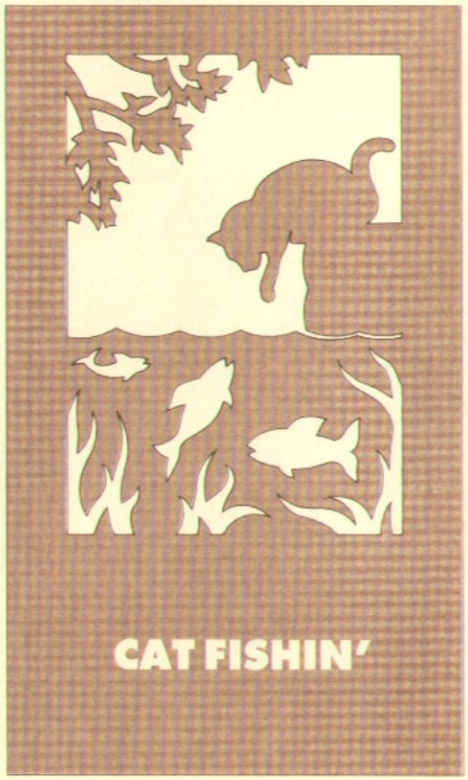

Sources

TOY BOX

All the hardware needed to build the Toy Box is available from **Woodsmith Project Supplies**. The package includes hinges, lid supports, shelf supports, casters, plus a sheet of full size patterns of letters A, B, and C and numerals 1, 2, and 3. Note: Wood and paint *not* included.

Toy Box Hardware

771-100 Toy Box Hardware Package $34.95
- (2) 1½" x 24" Hinges, Screws
- (2) Adjustable Lid Supports
- (4) 2" Plate Casters
- (4) Shelf Pin Supports
- (1) Pattern A, B, C and 1, 2, 3

HAND MIRROR

A 5" round beveled glass mirror for the Hand Mirror is available from **Woodsmith Project Supplies**. Included are a full-size mirror and letter pattern. *Please specify letter.* (We recommend Dow's Silicone Sealant to attach the mirror.)

Hand Mirror

771-200 5" Round Beveled Mirror (Specify letter) $8.95
- (1) Full-Size Mirror Pattern
- (1) Capital Letter Pattern

765-305 (3-oz. tube) Dow Silicone Sealant $3.29

MUSIC BOX

All the hardware for the Music Box is available from **Woodsmith Project Supplies**. This package contains an 18 note musical movement. Note: Wood is *not* included. (See wood kits in next column.)

Music Box Hardware

771-300 Edelweiss $14.95
771-302 It's A Small World $14.95
771-304 Silent Night $14.95
771-306 Somewhere Over The Rainbow $14.95
- (1pr.) ½" x 7/16" Brass Plated Hinges, Screws
- (1) ⅛" x 2⅞" x 3⅞" Plexiglas (You cut to fit your box.)
- (1) Musical movement with on/off pin. (Supplies limited, call for movement availability.)

Music Box Wood Kit

We also put together a wood kit containing *only* the wood, veneer, and inlay to make the Music Box. (Order the music movement and hardware separately, see column at left.) This package includes all the walnut, inlay, and burl veneer. Note: This is *not* a ready-to-assemble kit. All pieces must be cut. Burl veneer may contain patches or seams, so we're supplying more than you need.

Music Box Wood Kit

771-350 Music Box Wood and Inlay Kit $17.95
- (1) ½" x 2½" x 24" Walnut
- (1) ½" x 3½" x 4½" Walnut
- (1) ⅛" x 2⅞" x 3⅞" Walnut Plywood Bottom, Good 1 Side.
- (1) 4" x 12" Walnut Paper Backed Burl Veneer
- (1) 3/16" x 24" Maple/Walnut/Maple Inlay Strip

Music Box Chip-Carving Kit

We also put together a kit for chip-carvers. It's identical to the veneer kit, but instead of veneer and the inlay, we supply a long block of basswood for plenty of practicing. We're also including a full-sized chip-carving pattern.

Music Box Chip-Carving Kit

771-375 Music Box Chip-Carving Kit $17.95
- (1) ¼" x 2¾" x 16" Basswood
- (1) ½" x 2½" x 24" Walnut
- (1) ½" x 3½" x 4½" Walnut
- (1) ⅛" x 2⅞" x 3⅞" Walnut Plywood Bottom, Good 1 Side.

CARVING KNIVES

We experimented with a variety of knives while chip-carving the top of the Music Box shown on page 21. I even called Wayne Barton who is one of the finest chip-carvers around to ask him about carving knives. And he sent us a No. 1 Swiss made Klotzli cutting knife to try out.

What a difference — these are the same knives used in Swiss carving schools and Swiss wood shops. The blade is short (only 1¼"-long) so you can control the cut precisely. The handle is also shorter and thinner than the others we tried. It feels as if it was custom molded to fit my palm. After practicing, it made sharp, clean precision cuts safely and very accurately. (This is the knife I'd recommend. It's shown in the photos on page 21.)

If you don't want to make the investment of a Klotzli knife, we're offering a less expensive option. This knife has a larger (2½"-long) sheepfoot blade with a thick oval handle. While it can be used for chip carving, the longer blade makes it more of a multi-purpose knife.

Chip-Carving Knives

771-385 Klotzli Swiss Made Cutting Knife (Overall Length 5⅜") $13.50
759-120 Sheepfoot Blade Knife (Overall Length 6⅝") $6.50

ORDER INFORMATION

BY MAIL

To order by mail, use the form enclosed with a current issue or write your order on a piece of paper, and send with a check or money order. (Include $3.50 handling and shipping charge with each order.) IA residents add 4% sales tax; CA residents add 6.25% sales tax. Send to:

Woodsmith Project Supplies
P.O. Box 10350
Des Moines, IA 50306

BY PHONE

For faster service use our Toll Free order line. Phone orders can be placed Monday through Friday, 8:00 AM to 5:00 PM Central Standard Time.

Before calling, have your VISA or Master Card ready.

1-800-444-7002

Allow 4 to 6 weeks for delivery. Note: Prices subject to change after December, 1990.

NIGHT LIGHT

The hardware for the Night Light on page 26 is available from **Woodsmith Project Supplies**. This package includes a socket/light switch and plug (with six foot of cord), two 4 watt white night light bulbs, adhesive-backed green felt, and four full-size scroll saw patterns. (See previous page for patterns.)

Night Light Hardware

771-400 Night Light Hardware Package $9.95
- (1) Socket/Light Switch, Six Foot Cord and Plug
- (2) 4 Watt White Light Bulbs
- (1 pc.) Adhesive-Backed Felt
- (4) Full-Sized Patterns and Instructional Sheet: Falling Stars, Jack O'Lantern, Cat Fishin', and Snowy Pine.

Night Light Cherry Wood Kit

We also put together a cherry wood kit containing *only* the wood to make the Night Light.

771-450 Night Light Cherry Wood Kit $22.95
- (6pcs.) ¼" x 4¾" x 8" Panels
- (2pcs.) ½" x 5¼" x 6" Base/Lid
- (1pc.) ¾" x 4¾" x 16½" Sides
- (1) ¾" x 2" x 4" Lid Block
- (1) ⅛" x 2" x 4" Cherry Plywood Light Board, Good 1 Side.

VIX BITS

In Shop Notes, on page 24, we discussed using Vix bits. We are offering two sizes; a No. 5 Vix bit will drill pilot holes for No. 5 and 6 screws. The No. 9 Vix bit can be used for No. 8, 9, and 10 screws.

Vix Bits

771-505 No. 5 Vix Bit $8.95
771-509 No. 9 Vix Bit $9.95
771-500 Both Bits $17.95

ROUTER BITS

We also used some router bits that we don't normally use. These bits are carbide-tipped.

Router Bits

271-603 ⅛" Straight Bit (¼" Shank) $9.95
771-175 ¾" Roundover Bit (½" Shank Only) $44.95
758-350 ½" Dovetail Bit (¼" Shank Only) $15.75

Final Details

Paper Gripper

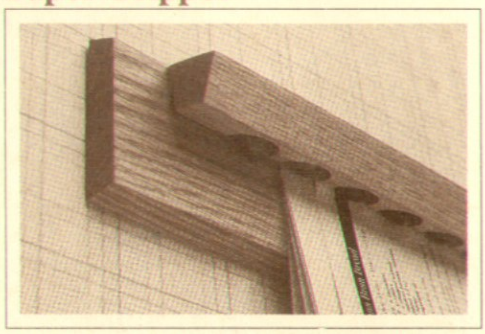

▲ *The secret to keeping paper in its place is a few ordinary glass marbles. A unique sliding dovetail system holds the Gripper to the wall.*

Hand Mirror

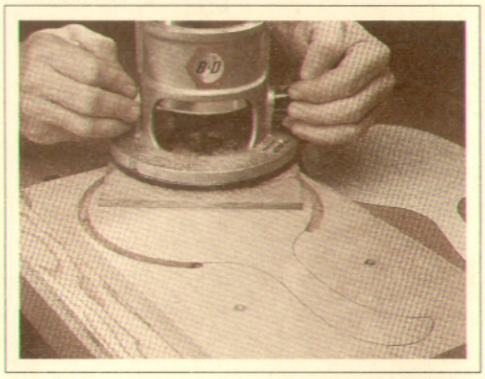

▲ *Making a circular Hand Mirror isn't as difficult as it may seem. With an auxiliary base on the router, simply pivot around a pin.*

Music Box

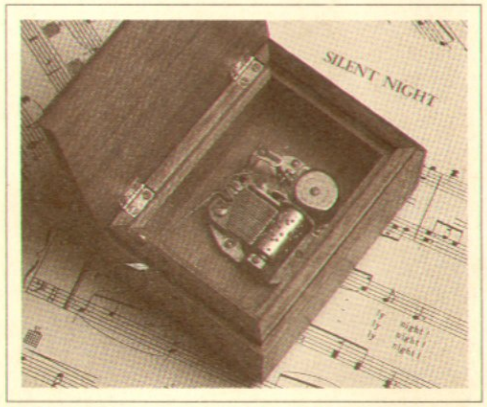

▲ *Opening this walnut Music Box is a pleasant surprise. The brass movement starts playing when the lid is lifted and stops when it's closed.*

Toy Box

▲ *Putting toys away should be as easy as possible. So we used special supports to hold the lids open and keep them from slamming shut.*

Night Light

▲ *Simply lift the lid off this cherry Night Light to remove one of the scroll sawn panels. A hidden storage chamber holds unused panels.*